AGSE-E132-E133-G02-LTLS

Air/Truck Shipping Stand With Manual Casters

For Rolls-Royce Trent 900 Used On A380

ORIGINAL MANUAL DATED. 02/10/2015
LATEST MANUAL REVISION LEVEL. . . . . 06/19/2019 (Rev G)

ADVANCED GROUND SYSTEMS ENGINEERING LLC
10805 Painter Ave., Santa Fe Springs, CA, 90670 • PHONE: 562-906-9300 • FAX: 562-906-9308 • E-MAIL: agse@agsecorp.com

INDEX

INDEX (Continued)

1.0 – Revisions

The following is an itemized record of all changes and revisions, if applicable, which have been incorporated into this manual.

PAGE	REV	DESCRIPTION OF CHANGE	DATE
All	F	Reissued to Rev F	10/03/2016
Title	G	Removed AGSE Job Number Description	06/19/2019
A	G	Removed Engineering Revisions	06/19/2019
1.0	G	Updated Index Page Numbers and Labeling	06/17/2019
6.0	G	Updated Declaration of Conformity	06/19/2019
7.0	G	Removed Reference to Section 11.0	06/19/2019
8.0	G	Removed Reference to Section 11.0 and Removed MFG	06/19/2019
8.1-8.20	G	Removed all MFG	06/19/2019
8.13	G	Replaced P/N AGSE-E13217-P04 and Added P/N -Com'l Flange Hex Nut in IPB Figure 6.	06/19/2019
8.13	G	Renumbered IPB Figure 6- AGSE-E13218 AFT Mount	06/19/2019
8.14	G	Revised Illustration	06/19/2019
8.21-8.22	G	Revised and Renumbered -IPB Figure 7-AM-2079-7	06/19/2019
8.23	G	Updated Figure 8.9-1, AM-2079-7 Caster Assembly	06/19/2019
10.0	G	Removed all MFG	06/19/2019
11.0	G	Deleted	06/19/2019

2.0 – Illustrations

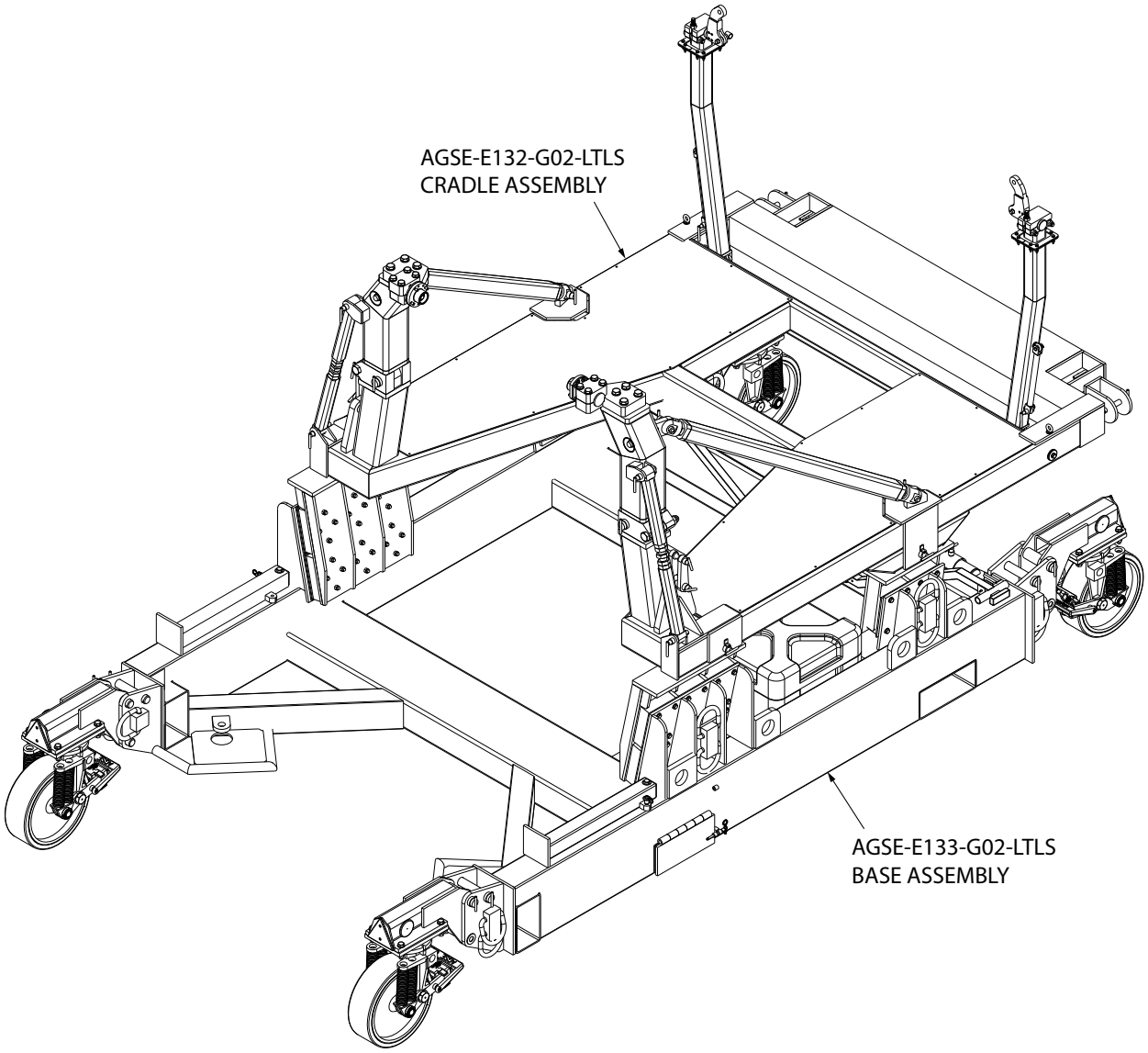

Figure 2.0-1 AGSE-E132/E133-LTLS Multi-Purpose Stand

2.0 – Illustrations

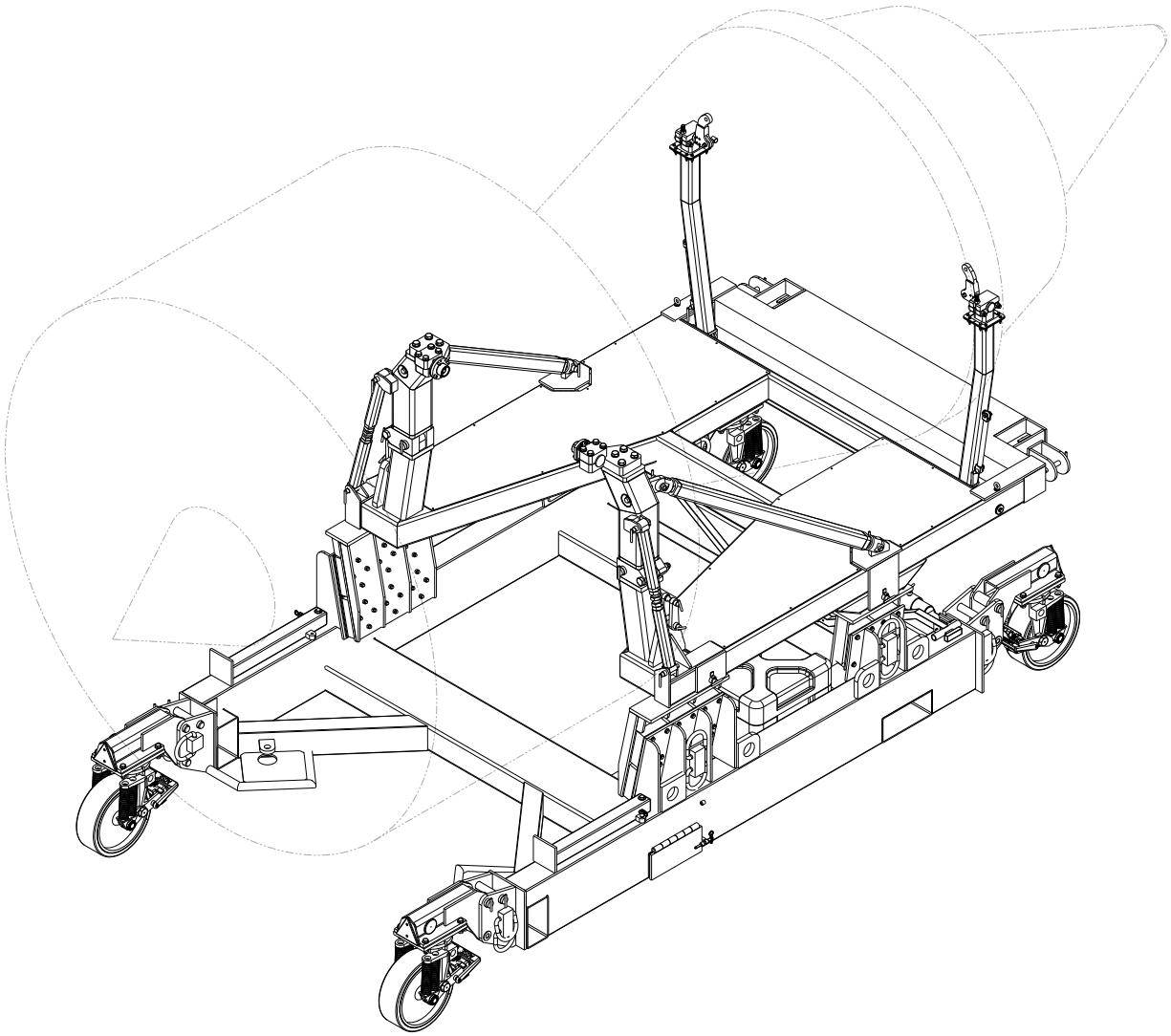

Figure 2.0-2 AGSE-E132/E133-LTLS Multi-Purpose Stand with Trent 900 Engine

3.0 – Specification

3.1 General

The Air/Truck Shipping Stand consist of the AGSE-E133-G02-LTLS Base and the AGSE-E132-G02-LTLS Cradle designed to transport and or store the Rolls-Royce Trent 900 engine in modified QEC configuration as used on the Airbus A380. The stand is compliant with Rolls-Royce Specification FDS 701, Trent 900 Multi-Purpose Stand. The stand with engine may only be air transported on specialized aircraft such as the Antonov 124, and ground transported on "air-ride" suspension equipped truck trailers. The stand can be used for installing or removing the engine from the A380 wing using the Airbus designated bootstrap system. The stand with engine may be fork lifted from either side and towed from either end.

3.2 Mobility

The stand is supported by four shock absorbing caster assemblies with 16" diameter by 5" wide polyurethane wheels. Each caster has a capacity of 6500 pounds at the speed of 3 MPH, four-position swivel locks and manual face brakes. The casters may be retracted for air or truck transport. The stand may be towed from either end using the telescoping tow bar assemblies stored on the stand. The cradle structure is supported by a system of elastomeric shock mounts to absorb transportation vibrations and rough handling shocks.

The base has tie-down points to secure the stand to a truck trailer or aircraft floor.

3.3 Design

3.3.1 AGSE-E132-G02-LTLS Cradle Assembly

The AGSE-E132-G02-LTLS Cradle Assembly consists of a welded steel tubular frame with removable handling mounts adapters that attach to the engine at the Rolls-Royce designated ground handling mounts. The AFT mount support system pivots to balance the vertical loads as required by Rolls-Royce. The cradle separates from the base for bootstrap installation or engine removal. The AFT mount support arms fold down and secure to the cradle frame to minimize empty shipping volume.

3.3.2 AGSE-E133-G02-LTLS Base Assembly

The AGSE-E133-G02-LTLS Base Assembly consists of a welded tubular frame with provisions for fork lifting, towing and securing to truck trailers or aircraft cargo floors. An integral shock mount system supports the cradle. The base has a container for the mount adapters, operation manual, and engine shipping documents if required.

3.4 Fabrication and Finish

Both the cradle and the base use structural steel shapes and tubes conforming to ASTM A36 and A500 materials. The mount adapters and pins used to secure them are made from 300 and 17-4 series stainless steels. All commercial hardware used on these assemblies is minimum SAE Grade 5. All steel surfaces are primed and painted with high grade Skydrol resistant enamel.

3.5 Characteristics

Note: All dimensions are with casters retracted. Add approximately 2 1/2" in height for casters deployed.

(Engine QEC configuration = 15,500 lbs)

	Engine Without Exhaust Nozzle and Cone (Air Ship)	Engine With Exhaust Nozzle and Cone (Truck Ship)	Without Engine
Length (IN.)	229.0	292.0	198.0
Width (IN.)	150.0 +	150.0 +	98.5
Height (IN.)	140.0 +	140.0 +	TBD (57)
Engine CL (IN.)	84.0	84.0	N/A
Cradle Weight (Lbs.)	N/A	N/A	3,800
Total Weight (Lbs.)			7,400

+ With support arms stowed.

4.0 – Maintenance and Inspection

4.1 General

Life expectancy of this equipment can be extended indefinitely, if it is properly maintained. By design, there is only minimal periodic servicing required. Annual inspections for damage, weld cracks, or corrosion are recommended. Prior to each use, this equipment should be inspected for obvious signs of abuse or shipping damage. Observed damage should require complete inspection of the affected area to ensure structural integrity is not compromised.

4.2 Cleaning and Painting

This equipment should be cleaned periodically with a soap and water solution and rinsed thoroughly.

CAUTION

Re-lubricate all grease zerk fittings after cleaning stand.

Damaged paint should be touched-up with paint provided by AGSE or other Skydrol resistant high-grade enamel paint. Superficial scratches are expected during normal usage and will not affect function.

4.3 Scheduled Service

All zerk fittings and jack screws should be lubricated every 90 days with the following extreme pressure grease or equivalent grease:

Visual inspection of the swivel locks and brakes should occur with the scheduled lubrication. All

Manufacturer	Product
Mobil Oil Company	Mobilux E.P. #1
Texaco Oil Company	Texaco E.P. #1
Gulf Oil Corporation	Gulf Crown E.P. #1
Shell Oil Company	Shell Alavania E.P. #1

non-painted machined surfaces should have a light grade oil spray as required. Spray with rust inhibitor, LPS-3 (MIL-C-16173D, Gr. 2) or equivalent.

4.4 Scheduled Inspection

CAUTION

Prior to each use, the stand should be inspected for obvious signs of abuse or shipping damage. Observed damage should require complete inspection of the affected area to ensure stand integrity is not compromised.

Annual inspections of machined surfaces, pins, fasteners, structure, jack screws, and shock mounts are recommended. The machined surfaces (wheels, axles, pivots) are to be visually inspected for signs of wear or corrosion. Action is to be taken immediately if areas are determined to be potentially dangerous to operating personnel, or a detriment to the equipment. Pins and fasteners are to be visually inspected for cracks, damage, or corrosion. Loose fasteners should be tightened to the torques listed in Table 4.4-1. The stand structure is to be visually inspected for damage, weld cracks, or corrosion. The jack screws are to be cleaned and inspected for proper function. The shock mounts are to be visually inspected for date stamp, deterioration, dis-bond from the mounting plate, or permanent deformation. The shock mount manufacturer recommends replacement after five (5) years of service.

CAUTION

Shock mounts must be replaced when any of the following conditions exist:

- **Date stamp is older than eight (8) years**
- **Rubber mount is deteriorated**
- **Rubber is dis-bonded from mounting plate**
- **Mount does not move when load is removed.**

Bolt Diameter	Torque (Ft-Lbs)	Torque (N-M)
1/4	6	8,14
3/8	20	27,12
1/2	50	67,79
5/8	100	135,58
3/4	165	223,71
7/8	265	359,29
1	400	542,33

Table 4.4-1. Torque Values.

5.0 – Operation

5.1 Engine Installation onto Stand Using 11C4484P03 (AGSE-L038-G02-DLH) Engine and Stand Lift Fixture (See Section 5.7 for Sling Usage)

NOTE

Casters must be deployed.

1) Inspect the engine stand for obvious damage and missing parts.
2) Remove the diagonal shipping braces.
3) Using the turnbuckle braces, retract the FWD mount supports. (Figure 5.1-1)
4) Release the AFT arm supports from the stowed position (Figure 5.1-2) then pivot outward and secure with the restraint braces. (Figure 5.1-3)
5) Install the AFT mount adapters on the AFT mount supports. (Figure 5.1-3)
6) Install the FWD mount trunnion assemblies, torque the attach bolts (3/8-24UNF) to 20 Ft-Lb (27,12 N-M) on the engine intercase.
7) Bring the engine to close position.

CAUTION

The final installed position is very close to the forward mount supports.

8) Extend the turnbuckle braces to rotate the FWD mount supports inward and secure with pins. (Figure 5.1-1)
9) Install the FWD mount saddle plates. (Figure 5.1-4)
10) Lower the engine until the FWD adapter trunnions fit into the saddle plates, loosely install the trunnion caps. (Figure 5.1-4)
    a) Hold the AFT arms and release the AFT mount support arm restraint.
11) Attach the AFT mount adapters to the engine using provided safety pins. (Figure 5.1-5)
    a) Stow the AFT arm restraint as shown.
12) Continue lowering the engine until the FWD trunnion cap bolts may be fully tightened.
13) Release the overhead hoist.
14) Install the diagonal shipping braces, and tightened the turnbuckle braces. The stand is now ready for transport or towing. (Figure 5.1-5).

CAUTION

Care must be taken when working near suspended loads. Personnel should never stand beneath the suspended load.

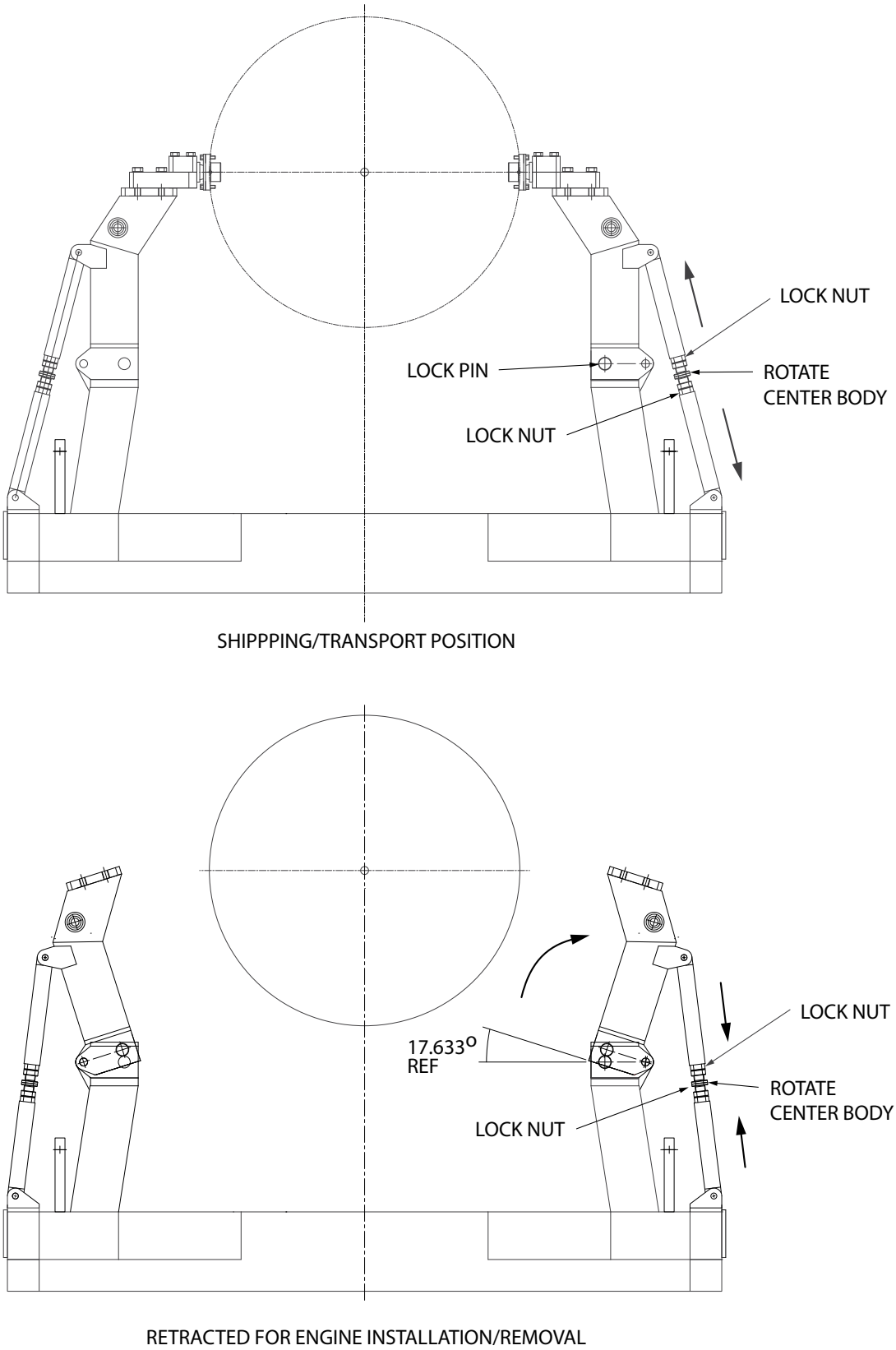

Figure 5.1-1 Forward Mount Support Turnbuckle Brace

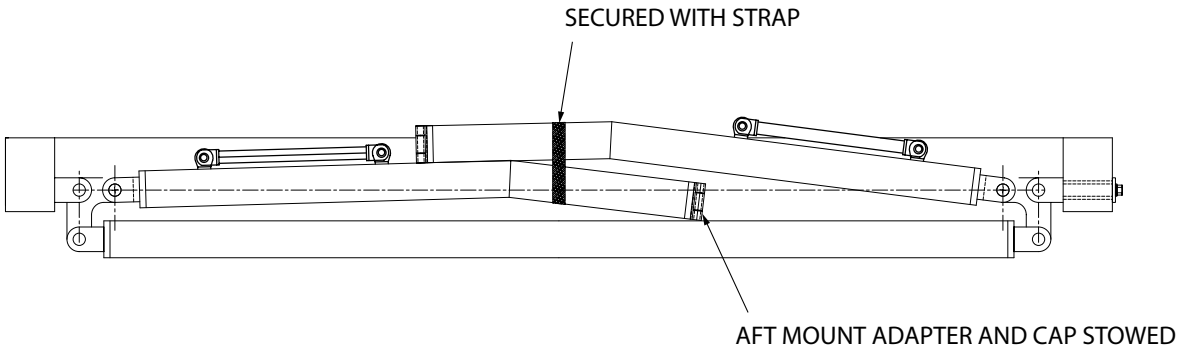

Figure 5.1-2 AFT Mount Support Arms

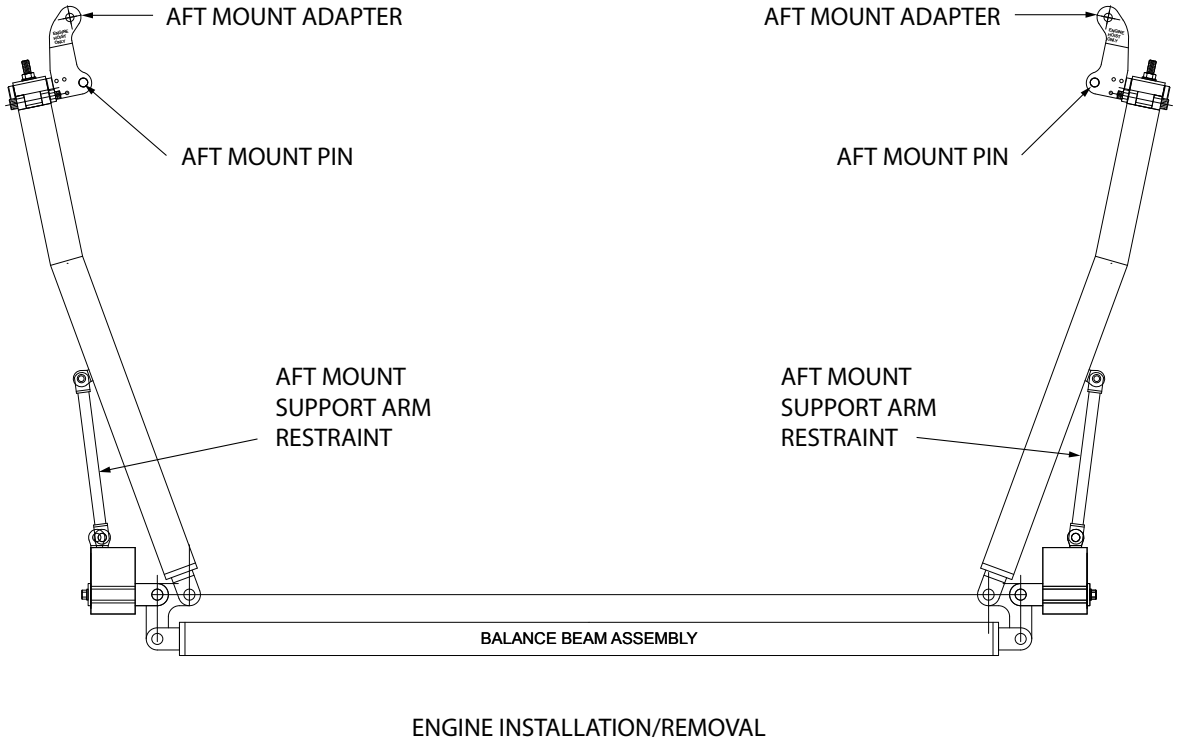

Figure 5.1-3

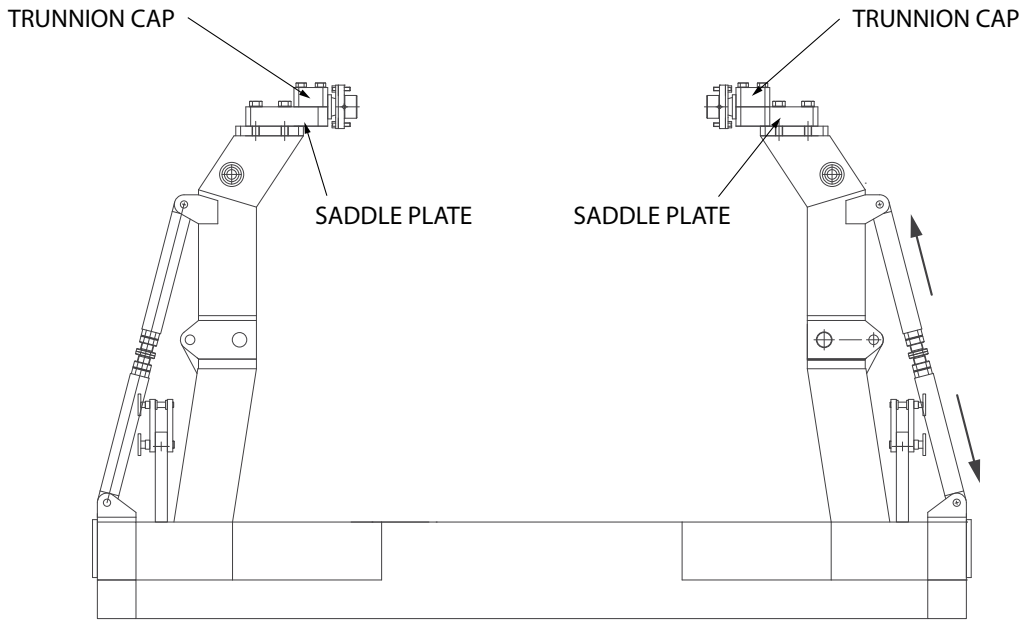

Figure 5.1-4

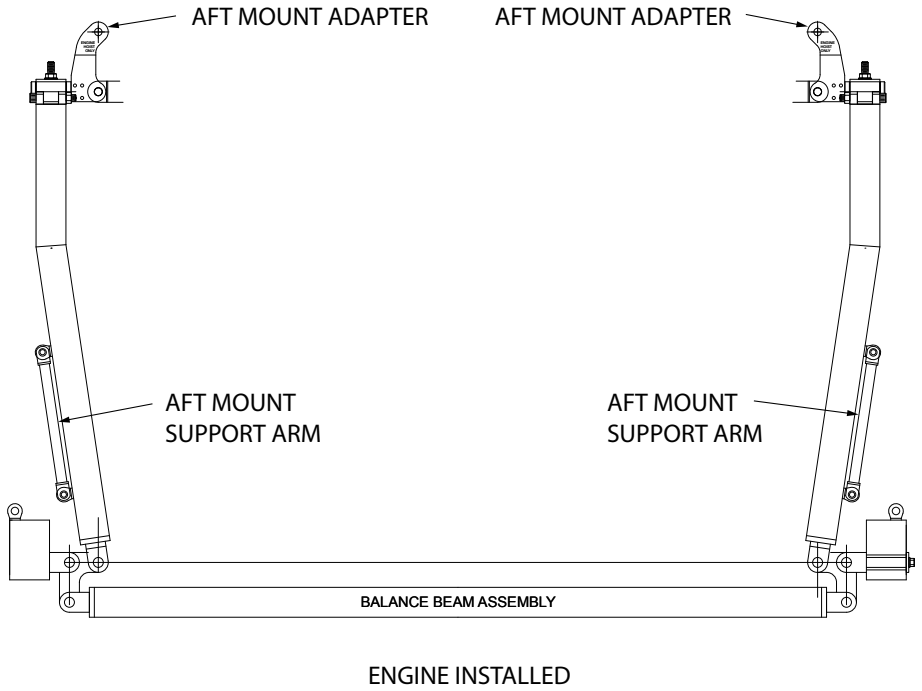

Figure 5.1-5

5.2 Forklifting (Illustration Figures 5.2-1 through 5.2-3)

CAUTION

Maximum fork size 13” (330 mm) wide, 5” (127 mm) thick: minimum length 120” (3.048 mm). Minimum capacity: 22,000 lbs. (10.000 kg) at 72” from lift mast.

1) Release and deploy both FWD fork stop arms and secure.
2) Open the fork tube blocker plates by removing the safety pins. Secure plates.
3) Adjust the fork tine spacing to align with the base fork pockets.
4) Insert the fork tines into the base fork pockets until the tines extend beyond the base frame and rest against the fork stop.
5) After removing the fork tines, release the fork stop arms, retract to store position and secure.

WARNING

Stand clear of Fork Stop swing-out area. A safety zone must be established during moving and positioning of stand to avoid injury from potential pinching and crushing points.

Figure 5.2-1

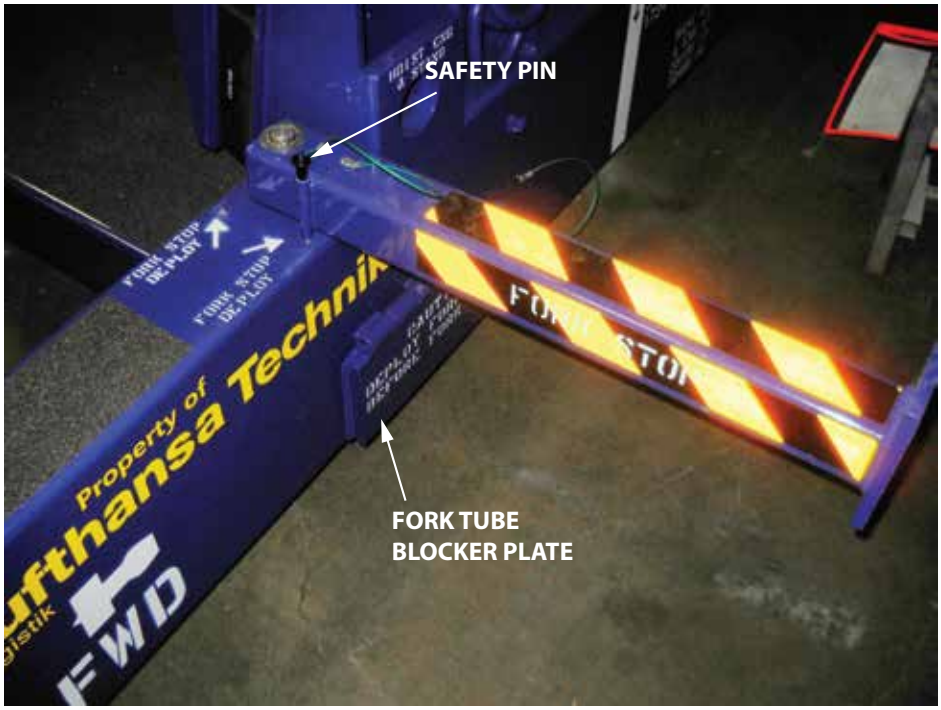

FORK STOP IN DEPLOY POSITION

FORK TUBE BLOCKER PLATE OPEN

Figure 5.2-2

5.3 Towing

1) Deploy the casters

   Raise the stand with a fork lift or an overhead hoist. (Figure 5.3-1)

CAUTION

Caster mount is very heavy: a minimum of two persons are required to reposition the mount.

Using the caster steering bar to support the mount weight, remove the caster mount pin. Lower the mount, align the pin holes, install the pin and secure. After deploying all four casters, lower the stand to the ground.

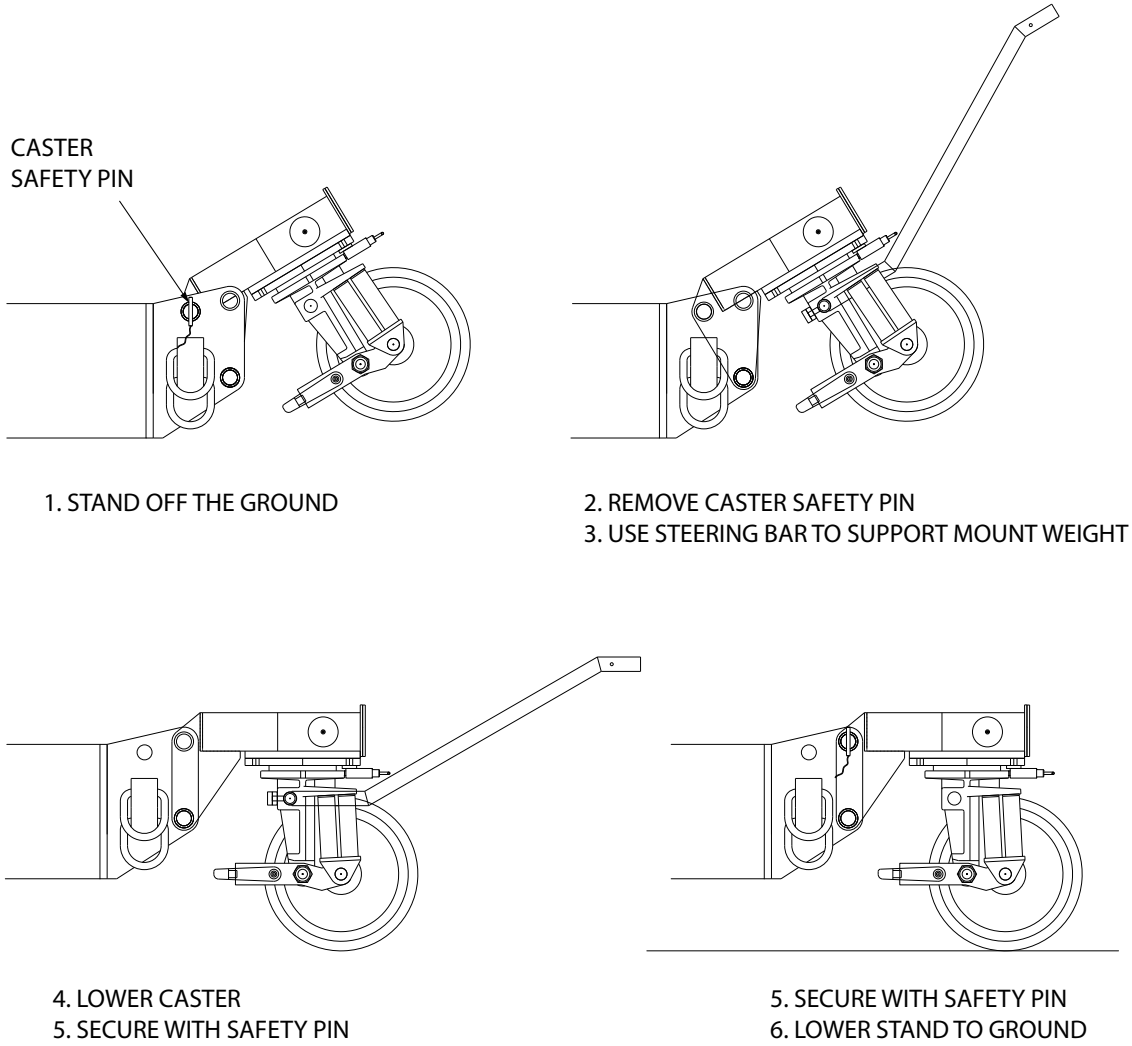

Figure 5.3-1

2) Deploy the tow bars (Illustration Figures 5.3-2 through 5.3-5)

NOTE

The tow bars are stowed at the AFT end of the base.

Release the tow bar storage latch plate and pull the tow bar assemblies outward. Secure the tow bar latch plate. Pull the tow bar extension pin and pull the inner tow bar assembly outward until the red band is visible. Align the extension pin holes, install the pin and secure. If towing from the FWD end is required, pin the tow bar attach pin and move the inner tow bar assembly to the forward attach point and repin.

CAUTION

The tow bar assembly is very heavy: a minimum of two persons are required to carry the tow bar assembly. Extreme care must be taken to avoid back strain and serious injury from dropping the tow bar assembly.

Release the leading caster swivel lock, engage the trailing caster swivel lock before towing.

Release all caster wheel brakes before towing.

Maximum towing speed is 3 MPH (5 KMH).

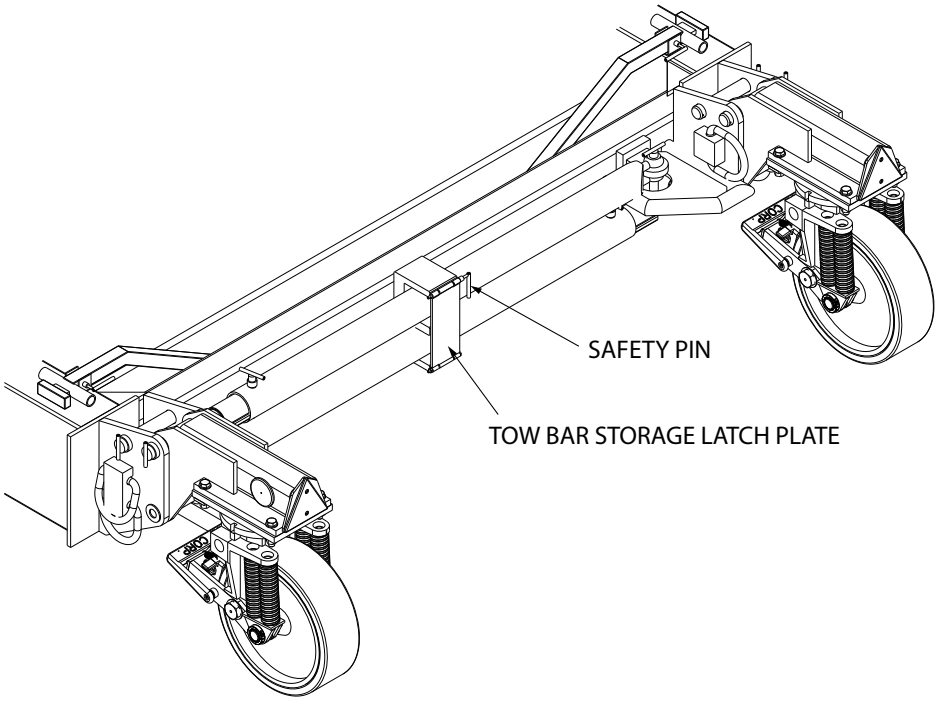

Figure 5.3-2

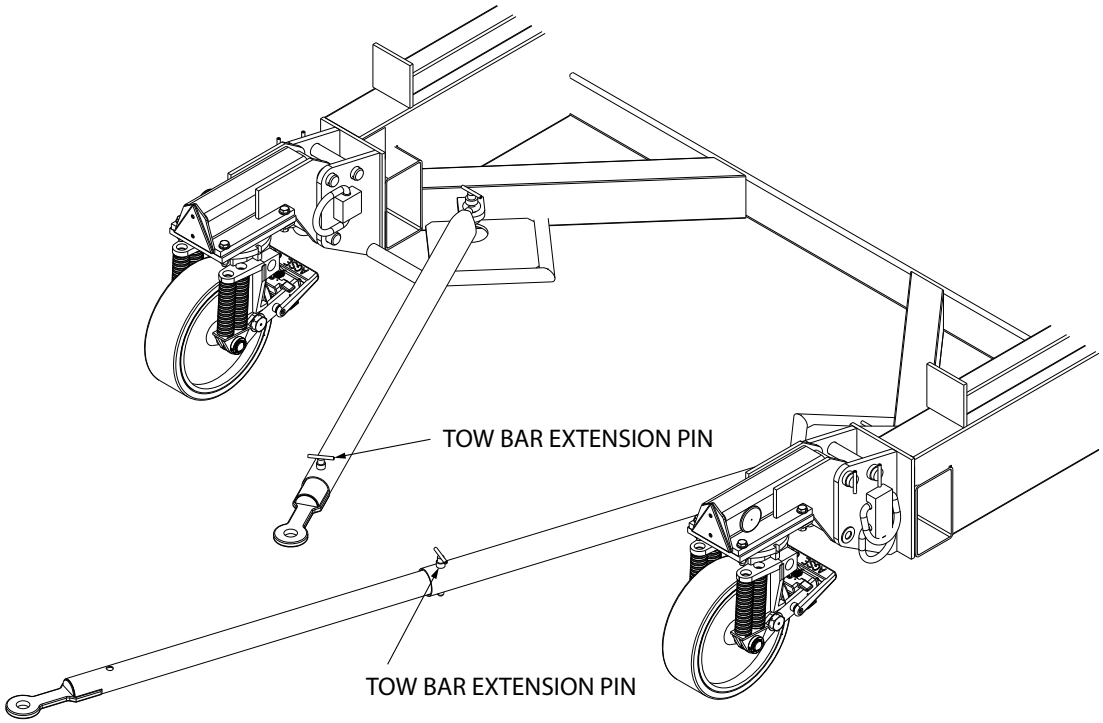

Figure 5.3-3

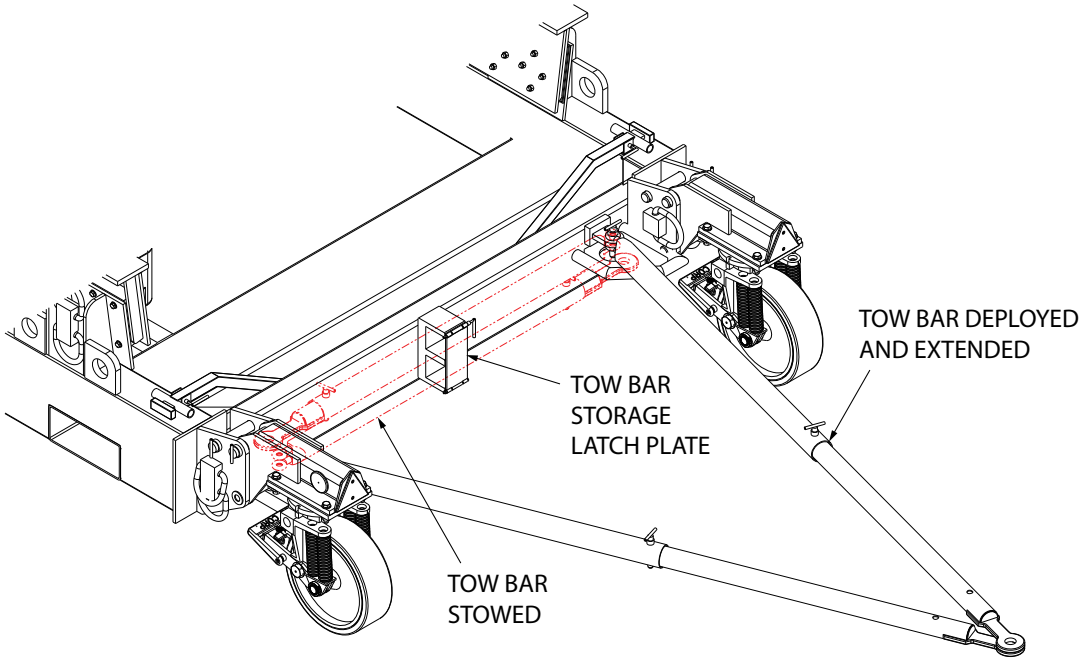

Figure 5.3-4 AFT End Towing

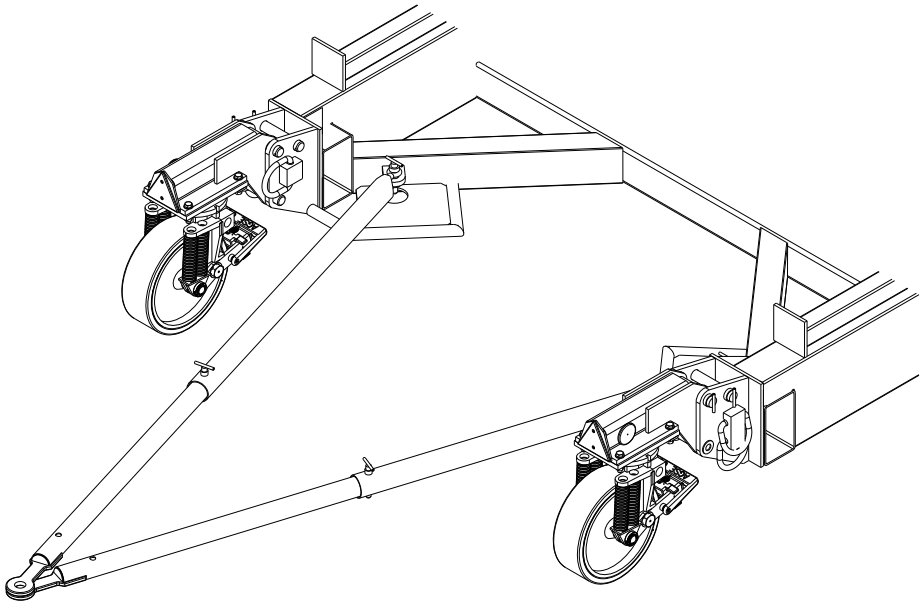

Figure 5.3-5 FWD End Towing

5.4 Caster Operation

To retract or extend caster mounts. (Figures 5.4-1 and 5.4-2)

1) The weight must be taken off the casters by lifting the stand with forklift.
2) Remove the safety pin to remove the caster steering bar from storage location at the stand's AFT end.
3) Unclip and remove the caster upper safety pin assembly while supporting the caster.
4) Insert the "T" end of the steering bar fully into the caster's steering socket.
5) Lift and rotate the caster by pushing the steering bar FWD until its hole aligns with the caster stow hole on the base frame.
4) Reinstall the safety pin assembly and secure.

CAUTION

The swivel locks must be locked before stowing or deploying the casters to avoid casters from swiveling.

WARNING

Casters are very heavy. Extreme care must be taken when stowing and deploying casters to avoid serious injury from potential pinching and crushing points.

Use provided steering bar for caster rotation (See Section 5.5). Watch for back muscle strain.

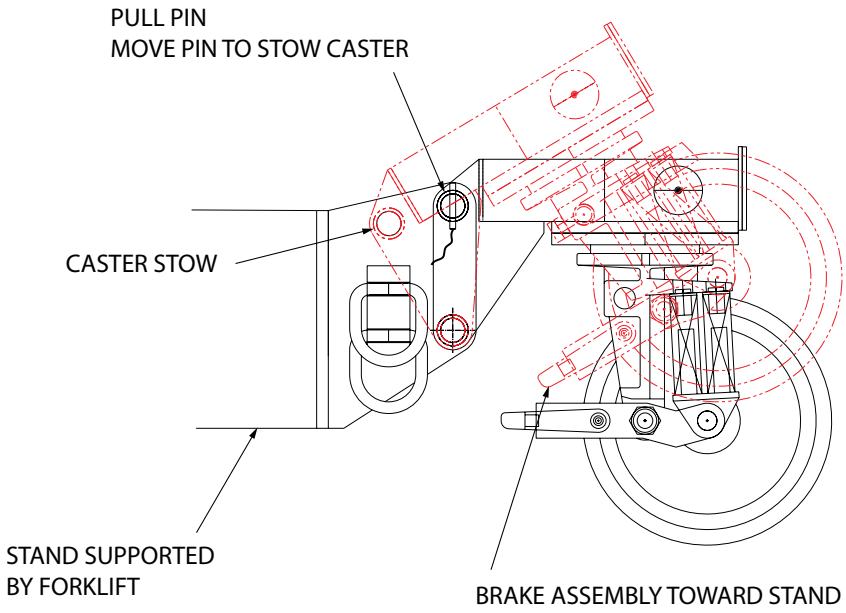

Figure 5.4-1 Retract/Extend Caster Mounts

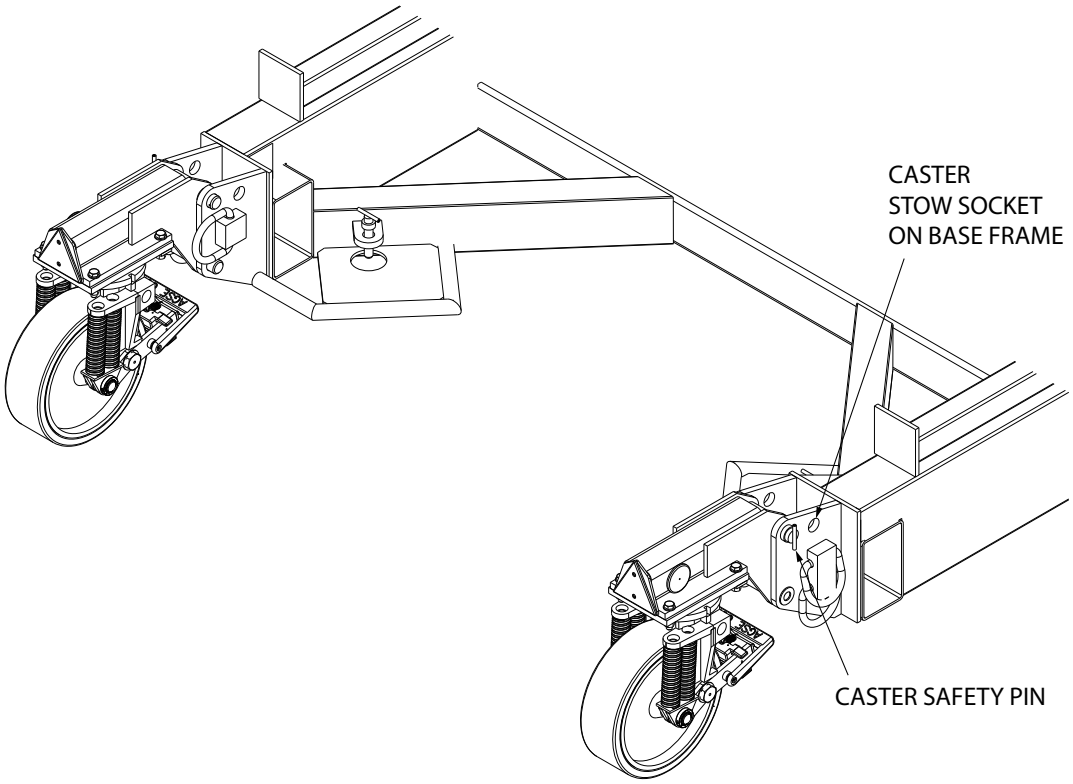

Figure 5.4-2

5.5 Steering Bar Operation

The steering bar provided is designed to facilitate the stowing, deploying and turning the casters. (Illustration Figures 5.5-1 through 5.5-3)

CAUTION

The caster swivel must be locked before stowing or deploying casters to avoid casters from swiveling.

5.5.1 Stowing the Casters (the stand must be OFF THE GROUND)

a. Be sure the caster swivel is locked. If not, lock the caster swivel by pulling out the lock handle and turn 90°.

b. Insert the "T" end of the steering bar fully into the caster's steering socket.

c. While supporting the weight of the caster with the steering bar, remove the safety pin securing the caster to the base.

d. Lift the caster by pushing the steering bar forward.

e. Align the caster mount hole with the caster stow hole on the base.

f. Insert the safety pin.

5.5.2 Deploying the Casters (the stand must be OFF THE GROUND)

a. Be sure the caster swivel is locked.

b. Insert the "T" end of the steering bar fully into the caster's steering socket.

c. While supporting the weight of the caster with the steering bar, remove the safety pin securing the caster to the base.

d. Lower the caster slowly.

e. While supporting the weight of the caster with the steering bar, insert the safety pin.

5.5.3 Steering the Casters

a. Unlock the caster swivel lock by pulling out the handle and turn 90°.

b. Insert the "T" end of the steering bar fully into the caster steering socket.

c. Pull or push on the steering bar to steer the caster to the desired position.

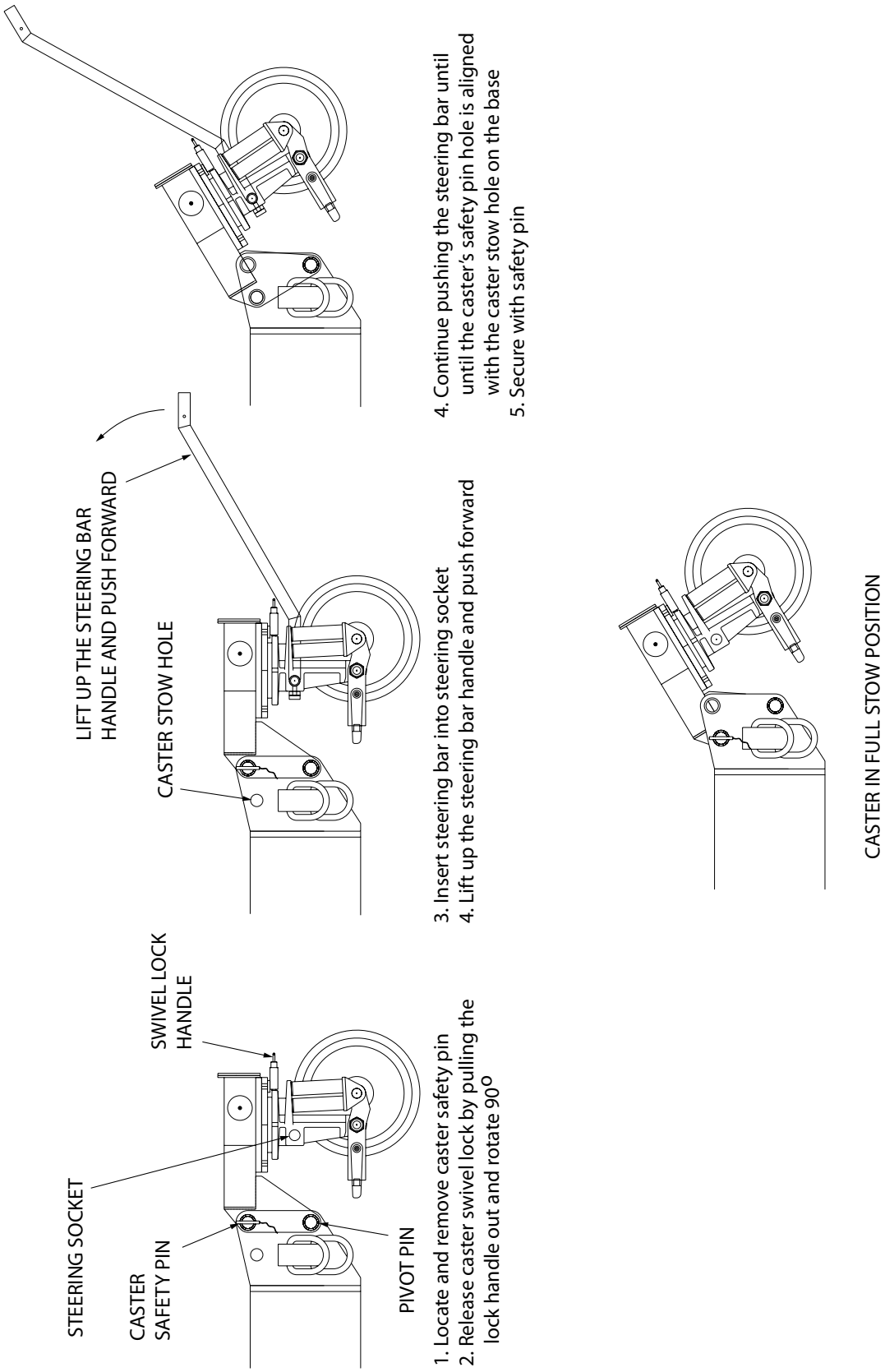
STEERING SOCKET
CASTER SAFETY PIN
SWIVEL LOCK HANDLE
PIVOT PIN
1. Locate and remove caster safety pin
2. Release caster swivel lock by pulling the lock handle out and rotate 90°
LIFT UP THE STEERING BAR HANDLE AND PUSH FORWARD
CASTER STOW HOLE
3. Insert steering bar into steering socket
4. Lift up the steering bar handle and push forward
4. Continue pushing the steering bar until until the caster's safety pin hole is aligned with the caster stow hole on the base
5. Secure with safety pin
CASTER IN FULL STOW POSITION

Figure 5.5-1

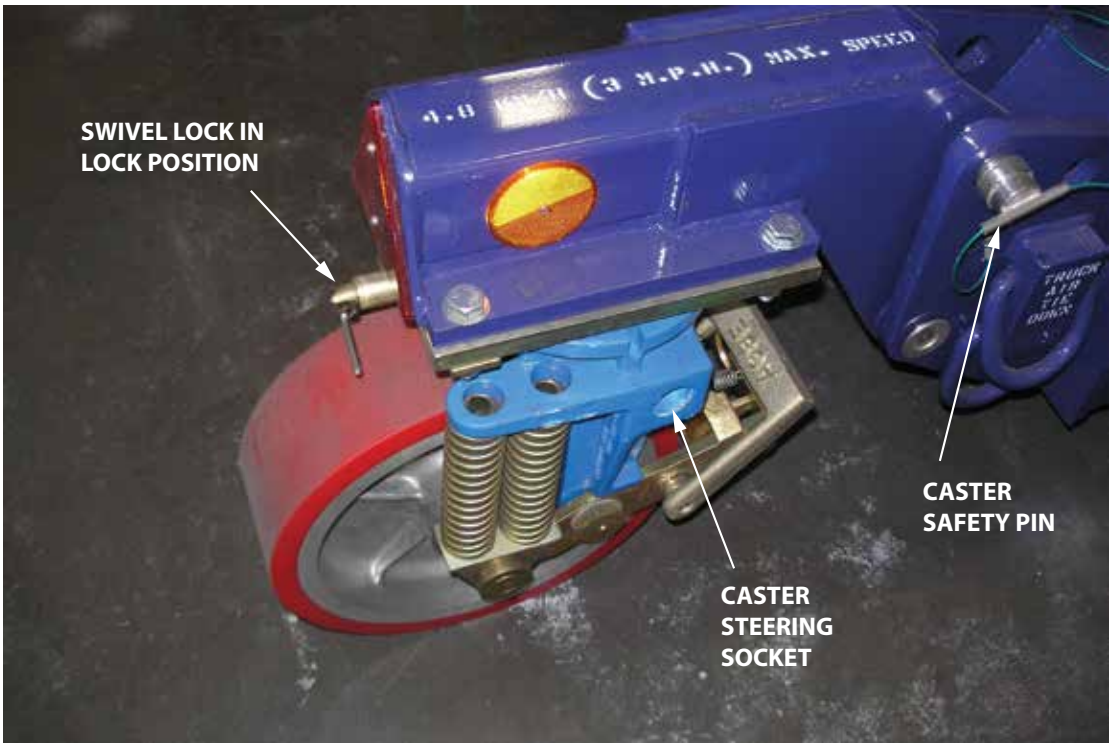
SWIVEL LOCK IN
LOCK POSITION
CASTER
SAFETY PIN
CASTER
STEERING
SOCKET

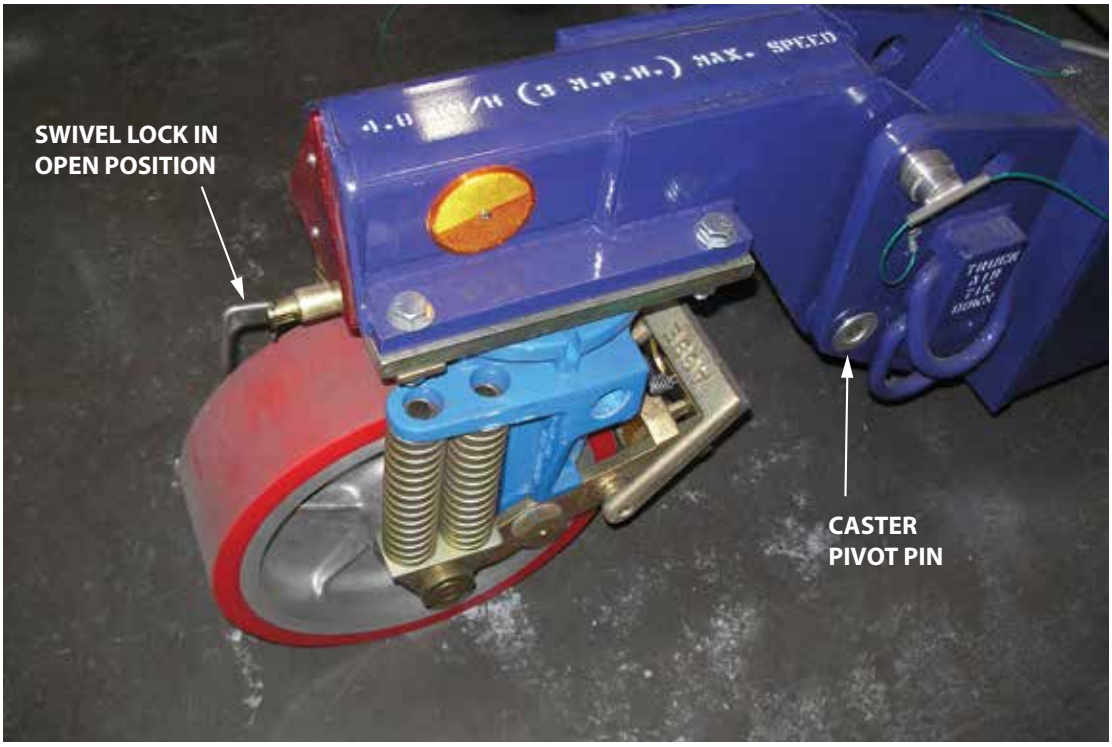
SWIVEL LOCK IN
OPEN POSITION
CASTER
PIVOT PIN

Figure 5.5-2

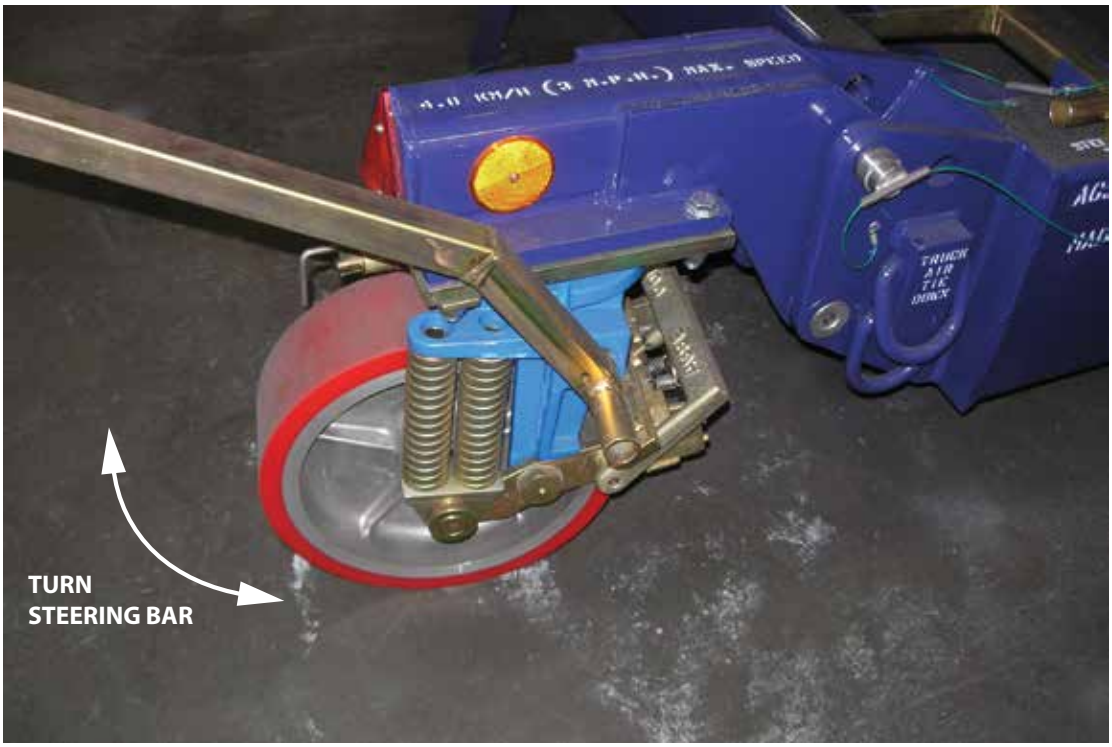

Figure 5.5-3

5.6 Engine Bootstrapping (Illustration Figure 5.6-1)

CAUTION

This procedure is intended to supplement the Airbus Bootstrap Procedure. It identifies the required steps to configure and use the equipment during engine bootstrapping. It shall not be used as a replacement for engine installation or removal.

WARNING

Care must be taken when working near suspended loads. Personnel should never stand beneath the suspended load.

5.6.1 Install Engine On Pylon

1) For the inboard pylon, position the stand with engine FWD of the empty pylon. For outboard pylon stand with engine may be positioned either FWD or AFT of the pylon.
2) Verify the engine to pylon clearance, remove the FWD mount support arm diagonal braces.

CAUTION

Engine clearance to the inboard pylon can be too close if the landing gear struts are not fully pressurized.

3) Position the stand/engine under and approximately centered on the pylon.
4) Install the Airbus Bootstrap system to the pylon and the stand per Airbus Bootstrap Manual.
5) Using the bootstrap system, lift the stand/engine, FWD end first, approximately 1” clear of the floor to allow the stand to self-center to the pylon. Lock the caster swivel locks and brakes. Set the stand/engine back down to the floor, AFT end first.
6) Using the bootstrap system, slowly raise the cradle to remove the four (4) cradle-to-base pins. Continue to raise the engine to the pylon.

CAUTION

During engine bootstrapping, watch for potential pinching and crushing points.

8) Attach the engine to the pylon per Airbus Maintenance Manual.
9) Remove the FWD trunnion caps and remove the AFT mount adapter pins. Use the bootstrap system as required to unload the caps and pins. Retract the AFT mount support arms.
10) Slightly lower the cradle away from the engine. Remove the FWD trunnion assemblies and saddle plates.
11) Continue to lower the cradle away from the engine and down onto the base. Pin the cradle to the base.

12) For the inboard pylon only, install the FWD mount support diagonal braces. Fully retract upper section of FWD mount support.
13) Release the caster brakes and swivel locks and move the stand AFT until clear of engine.
14) Store all mount parts and bootstrap links in the container on the base.

5.6.2 Remove Engine From Pylon

1) Release the stowed AFT mount support arms, move to the upright position and secure with braces. Install the AFT mount trunnions into the support arm clamps.
3) For inboard pylon, position the empty stand AFT of the pylon. For outboard pylon, the empty stand may be positioned either FWD or AFT of the pylon.
4) For inboard pylon, use the FWD mount support arm outer braces to fully retract the upper section of the FWD mount support arm. If installed, remove the trunnions, caps and saddle plates.
5) Position the empty stand under and approximately centered to the pylon.
6) Install the Airbus Bootstrap system to the pylon and stand per Airbus Bootstrap Manual.
7) Using the bootstrap system, lift the stand approximately 1” clear of the floor to allow the stand to self-center to the pylon. Lock the caster swivel locks and brakes. Set the stand back down to the floor.
8) Using the FWD mount support arm outer braces to move the upper section back to the upright position and pin. Remove the outer braces.
9) Using the bootstrap system, slowly raise the cradle to remove the four (4) cradle-to-base pins. Continue to raise the cradle to the engine.

CAUTION

During engine bootstrapping, watch for potential pinching and crushing points.

10) Attach the AFT mount trunnions to the engine. Install the FWD mount trunnions to the engine intercase.
11) Continue to raise the cradle until the FWD mount trunnion saddle plates can be installed. Raise the cradle while guiding the trunnions into the mount saddle plates. Install the caps and secure. Install the right side trunnion retaining cap.
12) Disconnect the engine from the pylon per Airbus Bootstrap Manual and Maintenance Manual.
13) Slowly lower the engine away from the pylon and down onto the base. Install the four (4) cradle-to-base pins.
14) Disconnect the Airbus Bootstrap System from the cradle. Install the FWD support arm outer brace and secure.
15) Move the stand with engine clear of the pylon.

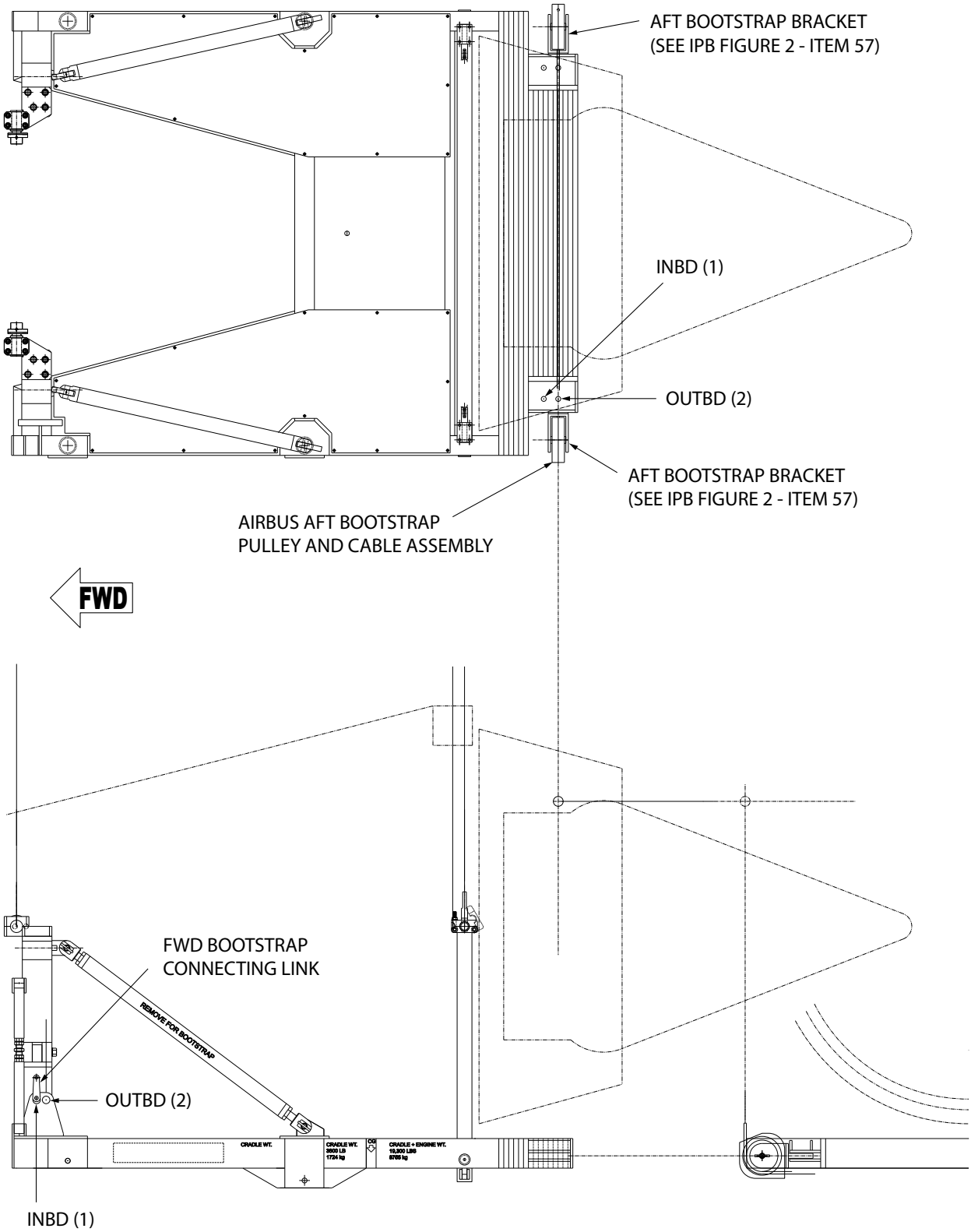

Figure 5.6-1 Bootstrap Attach Points

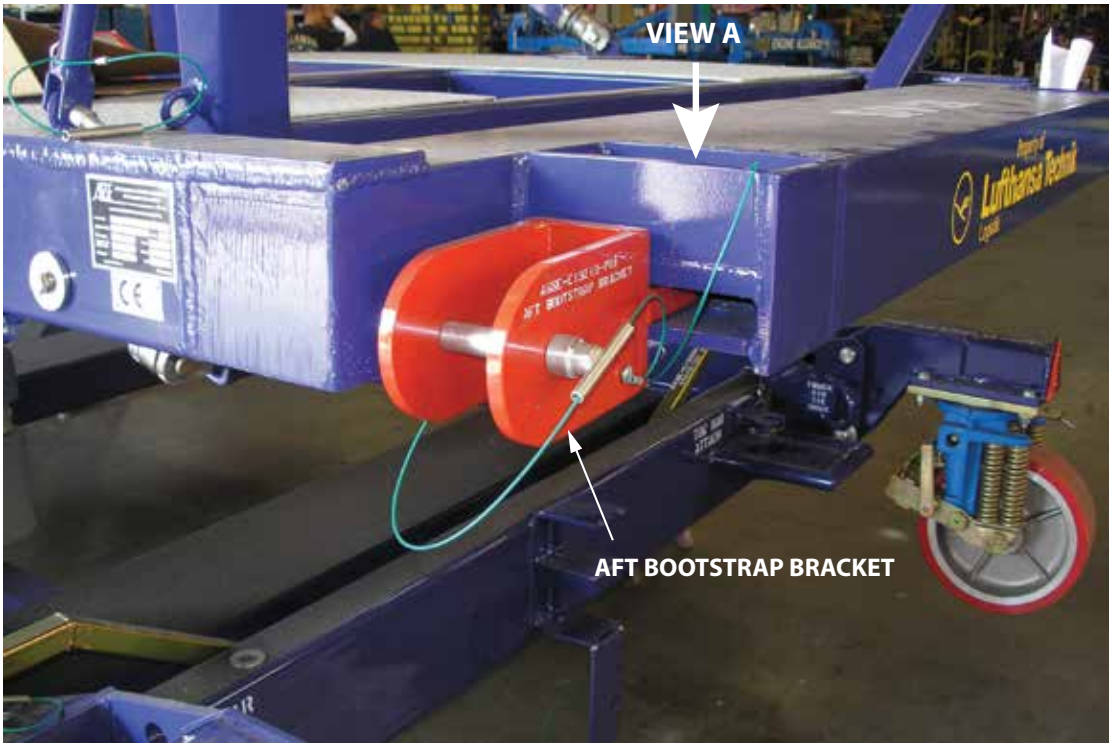

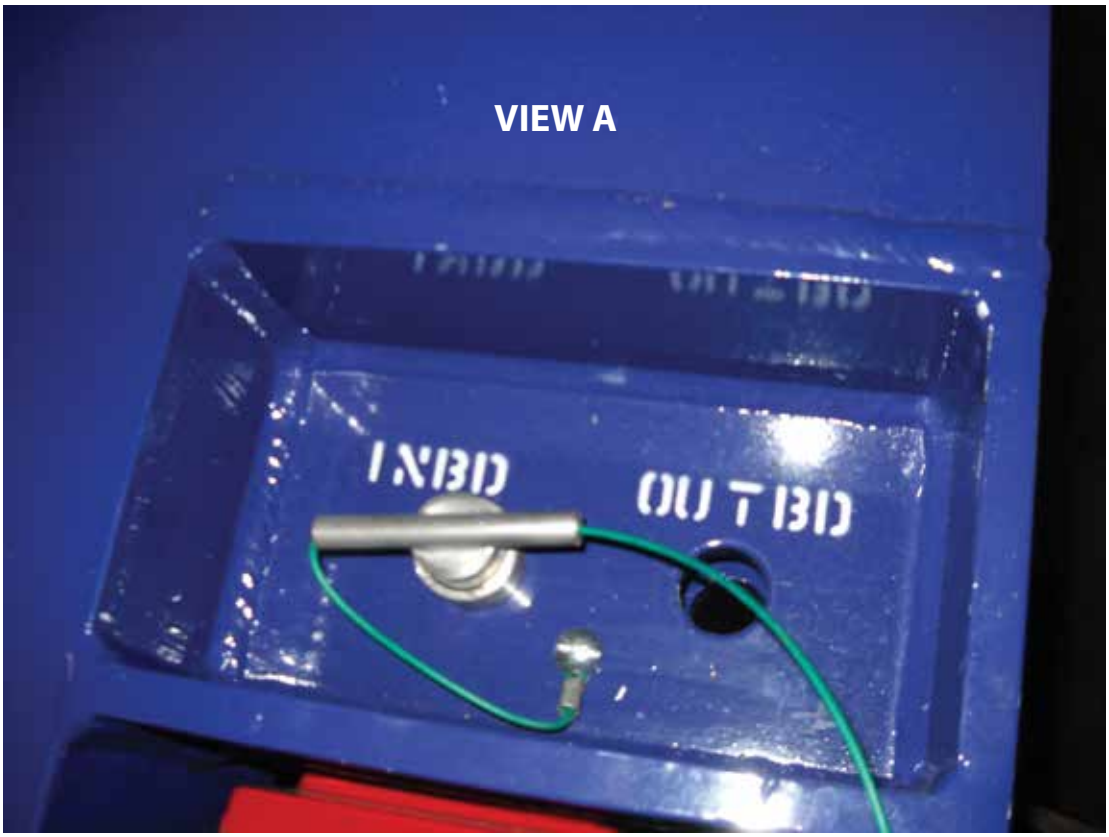

Figure 5.6-2


ATTACHMENT POINTS
FOR FWD BOOTSTRAP
CONNECTING LINK
INBD
OUTBD
FWD

Figure 5.6-3

5.7 11C4484P03 (AGSE-L038-G02-DLH) Sling Usage (Illustration Figures 5.7-1 and 5.7-2)

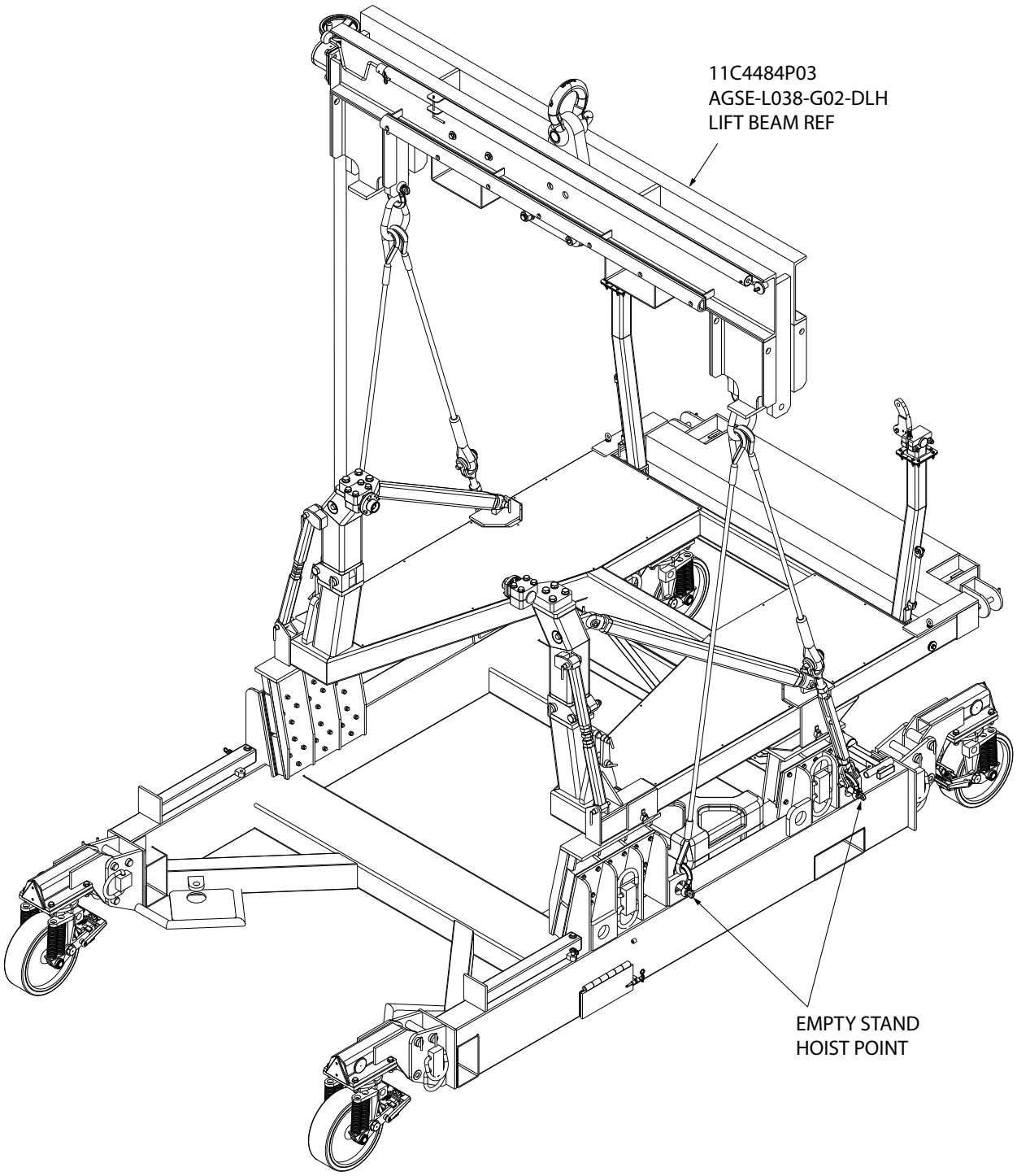

Figure 5.7-1 Empty Stand Hoist Points Using 11C4484P03 Sling

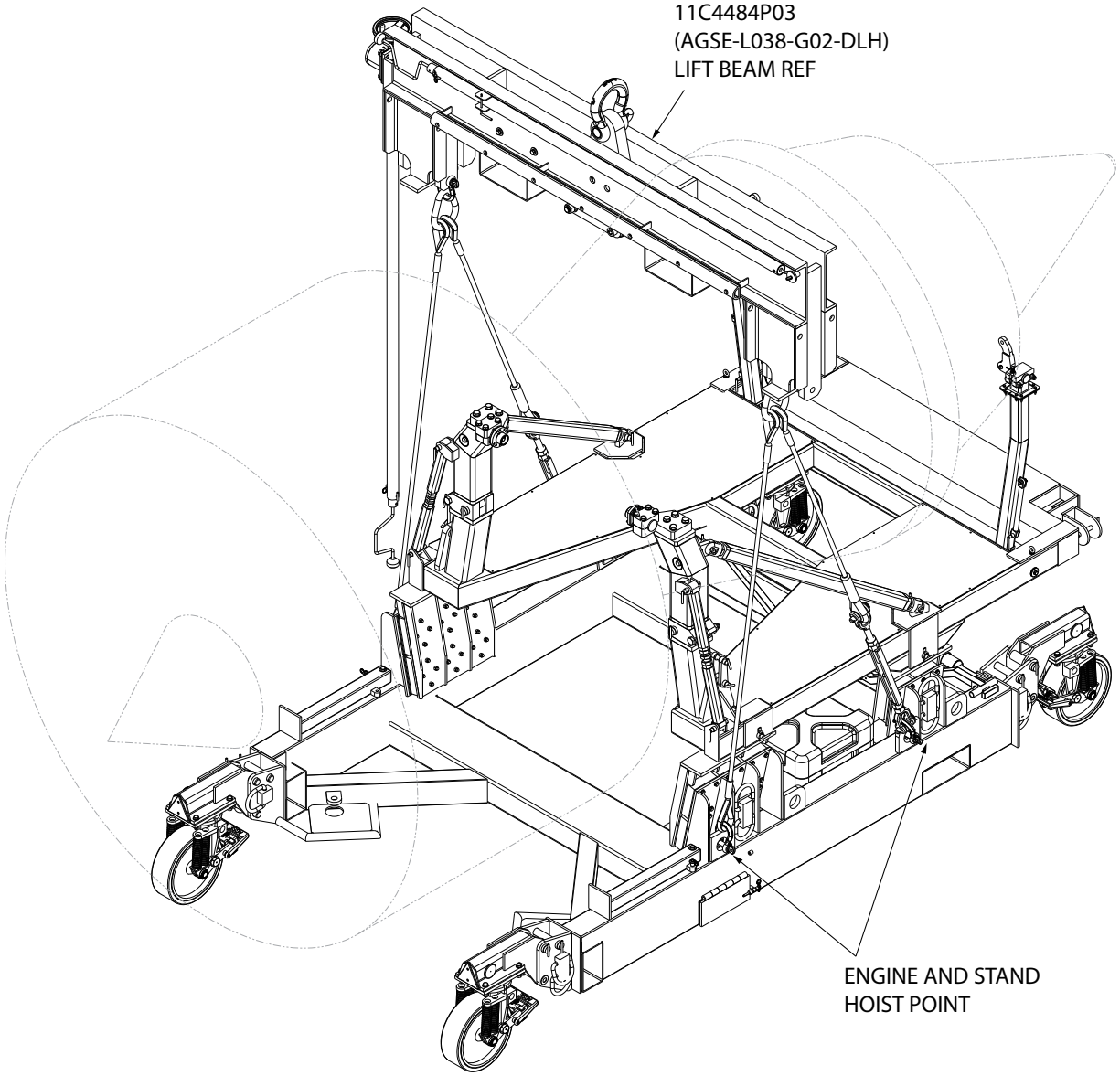

Figure 5.7-2 Engine and Stand Hoist Points Using 11C4484P03 Sling

6.0 – SAFETY

6.1 Stress

Design stress safety factors are compliant with Rolls-Royce Specification FDS 593. This equipment is provided with safety devices and guards to properly operate the equipment.

6.2 General

Most accidents are the result of violating standard safety rules in operation or improper servicing and maintenance of equipment.

Many safety features have been incorporated into the design to assist in safe operation of this equipment. These items do not fool-proof the equipment nor do they replace the operator's responsibility to operate the equipment in a safe manner.

CAUTION

Any deficiency revealed through inspection must be reported to supervisory personnel. A determination must be made prior to resuming operation, as to whether the deficiency constitutes a safety hazard to personnel or equipment.

It is the operator's responsibility to report any deficiencies, unusual noises, or operating conditions to supervisory personnel. It is also the responsibility of the user of this equipment to discontinue use until they are assured that the deficiency has been corrected.

6.3 Prevention

A good preventative maintenance program should include periodic lubrication, adjustment, and immediate correction of defects revealed through inspections. Preventive maintenance will not only contribute to safe operation, but will also extend useful service life as well.

6.4 Risk Assessment

6.4.1 Limits of the Machinery

The AGSE-E132/E133-G02-LTLS Air/Truck Shipping Stand is a commercial product designed specifically only to store and/or transport the Rolls-Royce Trent 900 engine. The equipment is to be used only by trained mechanics free from physical impairment and who are familiar with this or similar fixture. The equipment is not to be used or made available to the general public.

6.4.2 Risk Assessment and Residual Risk

The risk evaluation performed was based on objective observation based on the experience of AGSE with similar equipment. Necessary Warning and Caution Notes have been incorporated into the Operation Section of the Trent 900 All-purpose Roll-Over Stand Operation Manual along with instructions. Stencils also have been put on the equipment to identify hazardous and/or potential risk areas.

The operation of the AGSE-E132/E133-G02-LTLS Air/Truck Shipping Stand can be with medium risk of injury and is considered safe to use under supervision. Low residual risks include potential pinch points during operation of the equipment.

Equipment detailed in this manual has undergone stringent safety analyzing using methods and standards set forth withi European Standard EN 1050 and is considered to be safe for its intended use. Reports on risk analysis and evaluation according to 2006/42/EC Machinery Directive (17 May 2006) are available upon request.

ADVANCED GROUND SYSTEMS ENGINEERING LLC

EC DECLARATION OF CONFORMITY

The machinery listed below fulfills all relevant provisions of the directives listed:

- 2006/42/EC Machinery Directive (17 May 2006)

Machinery covered by this Declaration:

Description:	Trent 900/A380 Multipurpose Cradle/Base Assembly
Model:	AGSE-E132 and AGSE-E133
Part Numbers:	AGSE-E132-G02-LTLS Cradle AGSE-E133-G02-LTLS Base

Harmonized Standards:

- ISO 12100:2010 Safety of Machinery - General Principles for Design - Risk Assessment and Risk Reduction
- ISO/TR 14121-2:2012 Safety of Machinery - Risk Assessment - Part 2: Practical Guidance and Examples of Methods

Standards and Specifications:

- Rolls Royce, Test Facilities Design Specification FDS 701 (Issue 1), dated 31 October 2002.
- Lufthansa LEOS Technical Specification for Trent 900 Engine Shipping Equipment, dated October 22, 2014.
- AGSE Quality System Procedure Number QSP-006
- Aerospace Recommended Practice Standard, SAE ARP 1840, Revision B, 02/2007.

Place: Santa Fe Springs, California, USA
Date: 18 June 2019

Signed:
Stevan Case
Engineering Manager

Technical File: Jean-Marc Neveu
Techman-Head
10 Ave Loeonce Duteil
ZI du Sanital – 86100
Chatelleraut, France
+33(0)5 49 02 53 40

7.0 – Warranty

7.1 Statement of Warranty

Advanced Ground Systems Engineering LLC (AGSE) warrants to original purchasers that it's products will be free of defects in material and workmanship under normal use and conditions for claims received within a period of one year from date of purchase (final billing date), and to the extent that if any AGSE product fails in operation because of such defect, the company will replace or repair, at its option, the defective article. Prior to the repair or replacement of any defective product, the company shall be notified in writing as to the nature of the defect. The company shall assume no liability for freight, disassembly, removal, refitting and installation charges on any article returned unless such charge(s) is approved by AGSE in writing prior to the return. On component items purchased by AGSE for incorporation into an AGSE manufactured product, only the component manufacturer's warranty (if any) shall apply to that component. Said manufacturers warranty shall be passed on to AGSE's customer to the extent permitted. This warranty is applicable only when AGSE products are operated for intended purposes within the recommended procedures, load limits, properly maintained, not damaged or abused, etc., including as indicated in company manuals, catalogs, and drawings. All warranty claims must be applied for within sixty days from when the defect becomes known. The foregoing warranty is in lieu of all other warranties, or liabilities, either expressed or implied, and AGSE expressly excludes all implied warranties of merchantability and fitness for a particular purpose and all non-infringement warranties as well as disclaims all liabilities to third parties. In no event shall AGSE be liable for any amounts in excess of the purchase price of the product.

CAUTION

Failure to conduct periodic inspections, routine maintenance, or improper operation will result in the voiding of the warranty.

8.0 – Parts Breakdown

8.1 General

The following pages can be used in the identification of components used in the product described in this manual. Parts Lists are broken down by “ITEM,” “PART NUMBER,” “QTY,” and “DESCRIPTION.”

NOTICE

“ITEM” numbers are for reference to the Illustrated Parts Breakdown (IPB) only. Do not order replacement parts by “ITEM” number. Order parts by “PART NUMBER” only.

Purchased parts will reflect a valid part number and source from which the product may be purchased. AGSE does not guarantee availability of purchased parts indefinitely.

8.2 Illustrated Parts Breakdown

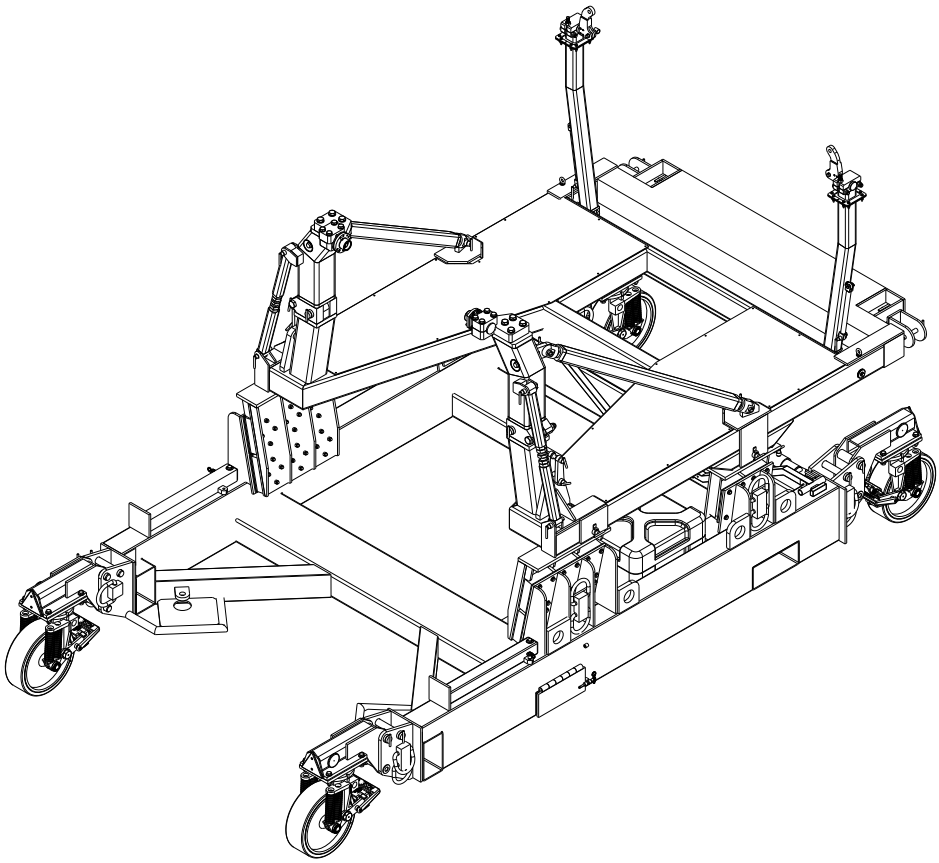

IPB Figure 1 - AGSE-E132/E133-G02-LTLS Multi-Purpose Stand Assembly

ITEM	PART NUMBER	QTY	PART DESCRIPTION
	AGSE-E132/E133-G02-LTLS		Multi-Purpose Stand Assembly (Figures 8.1-1)
1	AGSE-E132-G02-LTLS	1	Cradle Assy (See IPB Figure 2 for Details)
2	AGSE-E133-G02-LTLS	1	Base Assy (See IPB Figure 7 for Details)

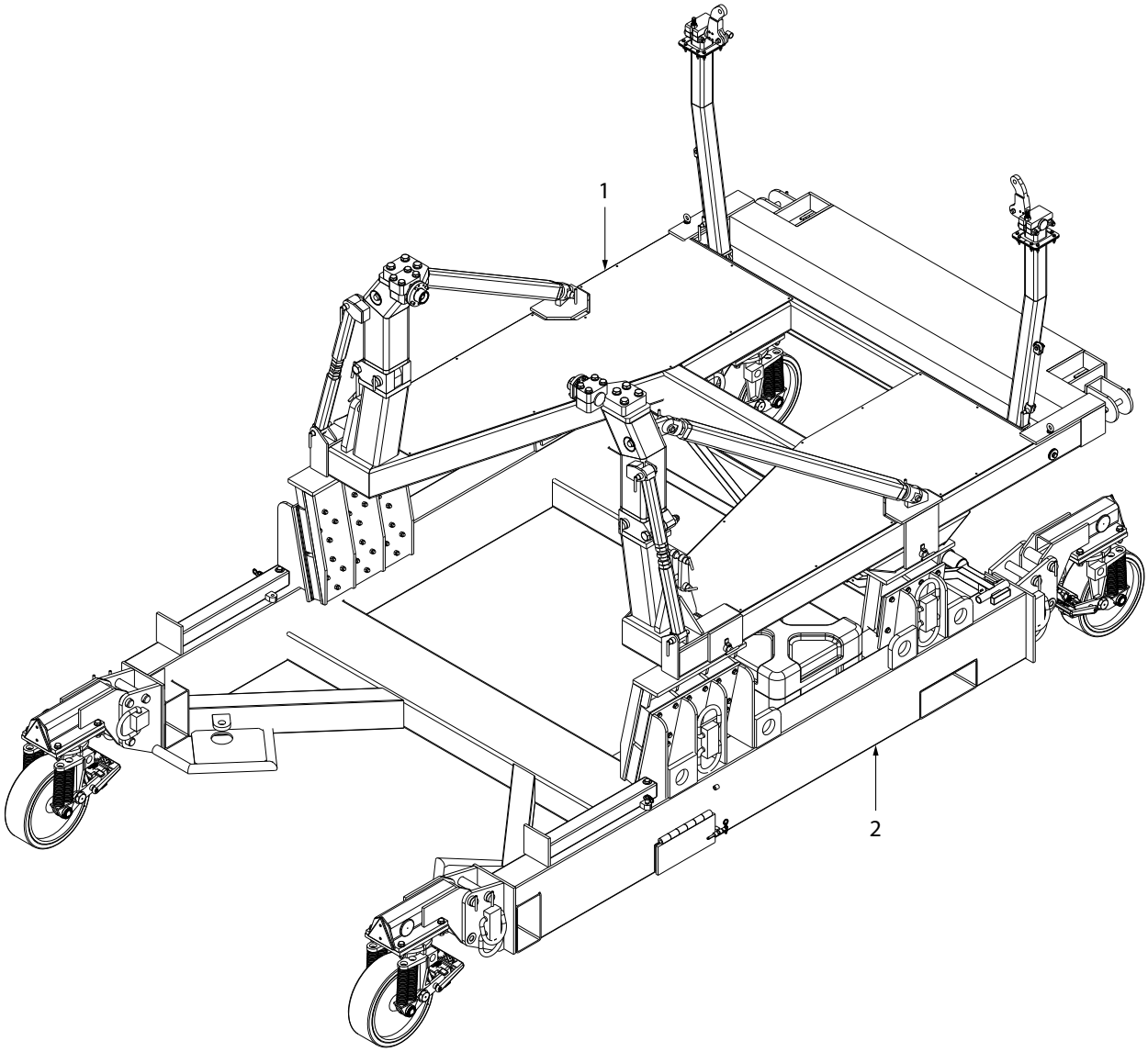

Figure 8.1-1 AGSE-E132/E133-LTLS Multi-Purpose Stand Assembly

IPB Figure 2 - AGSE-E132-G02-LTLS Cradle Assembly

ITEM	PART NUMBER	QTY	PART DESCRIPTION
	AGSE-E132-G02-LTLS	-	Cradle Assembly
			(Illustration Figures 8.2-1 through 8.2-3)
1	AGSE-E13201-P04	1	Cradle Weldment
2	AGSE-E13201-P02	1	Platform - LH
3	AGSE-E13201-P03	1	Platform - RH
4	AGSE-E13202-P01	1	FWD Mount Support - LH
5	AGSE-E13202-P02	1	FWD Mount Support - RH
6	AGSE-E13223-S01	1	Trunnion Assy - RH
			(See IPB Figure 3 for Details)
7	AGSE-E16607-S05	1	Trunnion Assy - LH
			(See IPB Figure 4 for Details)
8	AGSE-E13207-P05	2	Restraint Link
9	Commercial	2	Flat Washer - 1/2” Nom ID - Stl - Zinc Plt
18	AGSE-E13207-P04	1	Balance Beam
20	AGSE-E13208-S01	2	AFT Mount Adapter Assy
21	AGSE-E13208-P02	2	Bellcrank
22	AGSE-E13208-P03	2	Pivot Clevis
23	AGSE-E13208-P04	2	Retainer
25	AGSE-E13209-P01	2	Eye Bolt
26	AGSE-E13220-S01	2	Brace Assy
29	AM-90875-66T	2	Safety Pin Assy
32	AGSE-E13209-P04	2	Cradle Pin
33	AGSE-E13206-S01	2	Turnbuckle Assy
			(See IPB Figure 5 For Details)
34	AM-91000-40T	6	Safety Pin Assy
35	Commercial	26	Flt Soc Hd Scr - 1/4”-28UNF x 1/2” Lg - Cres
36	AM-91500-100T-H900	2	Safety Pin Assy
37	Commercial	2	HHCS - 1”-8UNC x 7-1/2” Lg - Gr 8 - Zinc Plt
38	Commercial	4	Hex Lock Nut - 1”-8UNC - Zinc Plt

IPB Figure 2 - AGSE-E132-G02-LTLS Cradle Assembly (Continued)

ITEM	PART NUMBER	QTY	PART DESCRIPTION
49	AM-90750-48L-H900	4	Safety Pin Assy
50	Commercial	2	HHCS - 1/2”-13UNC x 3-1/2” Lg - Cres
51	CLP-230	4	Clevis Pin
52	Commercial	4	Flat Washer - 1” Nom ID - Cres
53	Commercial	4	Cotter Pin - 3/16” Dia. x 2 “ Lg - Cres
54	Commercial	3	HHCS - 1/2”-20UNF x 1-1/4” Lg - Gr 5 - Zinc Plt
55	Commercial	3	Lock Washer - 1/2” Nom ID - Cres
56	AM-91000-32T	2	Safety Pin Assy
57	AGSE-E13219-P01	2	Weldment - AFT Bootstrap Bracket
59	AGSE-E13222-S01	1	Bootstrap Link Assy
60	AGSE-E13218-S03 DLH	1	Aft Mount Support - RH (See IPB Figure 6 For Details)
61	AGSE-E13218-S04 DLH	1	Aft Mount Support - LH (See IPB Figure 6 For Details)
62	AM-90500-20T	2	Safety Pin Assy
63	AM-2177-102	2	Clevis Pin
64	AM-2177-109	2	Cotter Pin
65	AGSE-E13218-P05	4	Clamp Plate - MVP Bag
66	Commercial	16	HHCS - 1/4”-20UNC x 1-1/2” Lg - Cres
67	Commercial	32	Flat Washer - 1/4” Nom ID - Cres
68	Commercial	16	Lock Washer - 1/4” Nom ID - Cres
69	Commercial	16	Hex Nut - 1/4”-20UNC - Cres

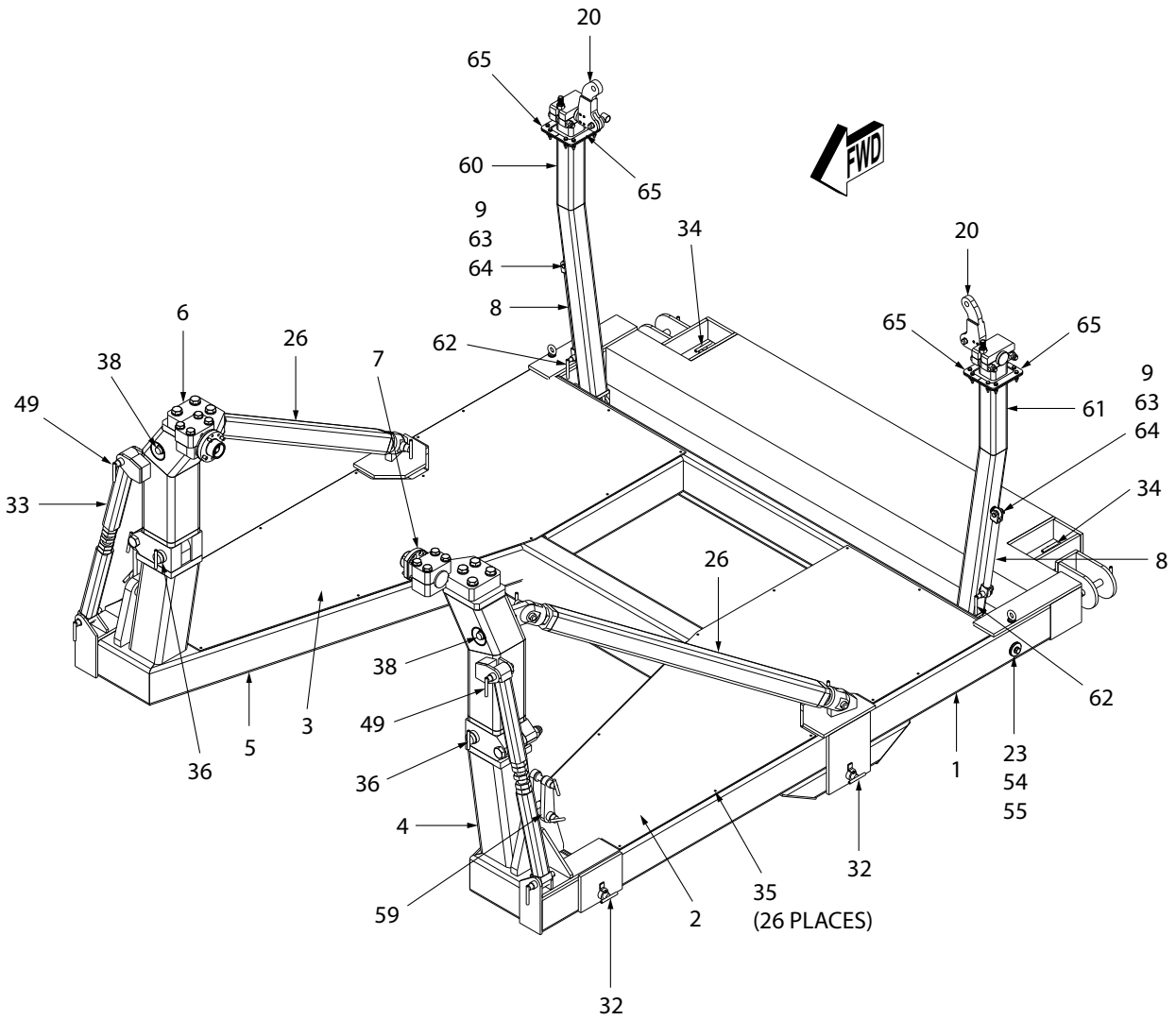

Figure 8.2-1 AGSE-E132-G02-LTLS Cradle Assembly

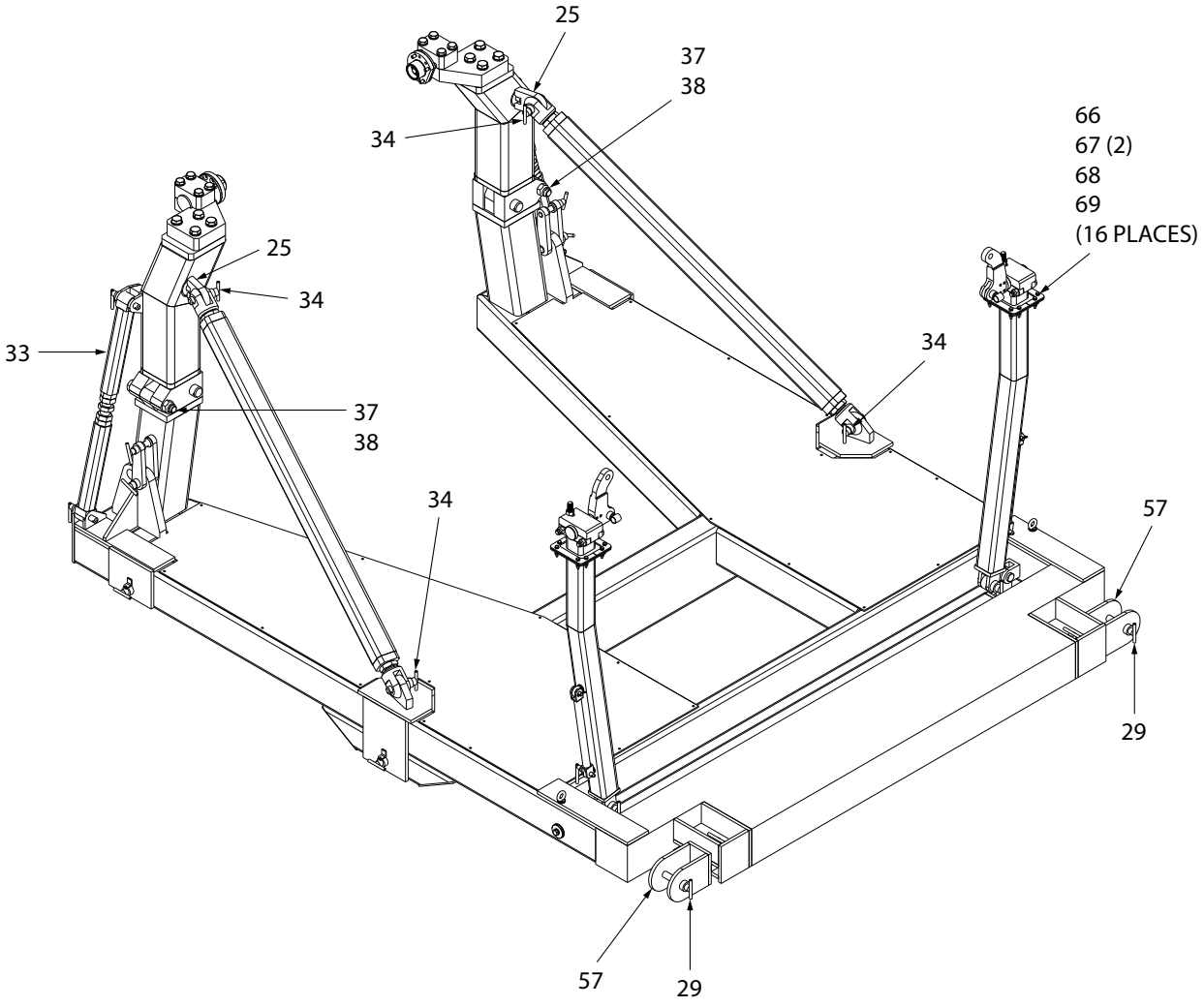

Figure 8.2-2

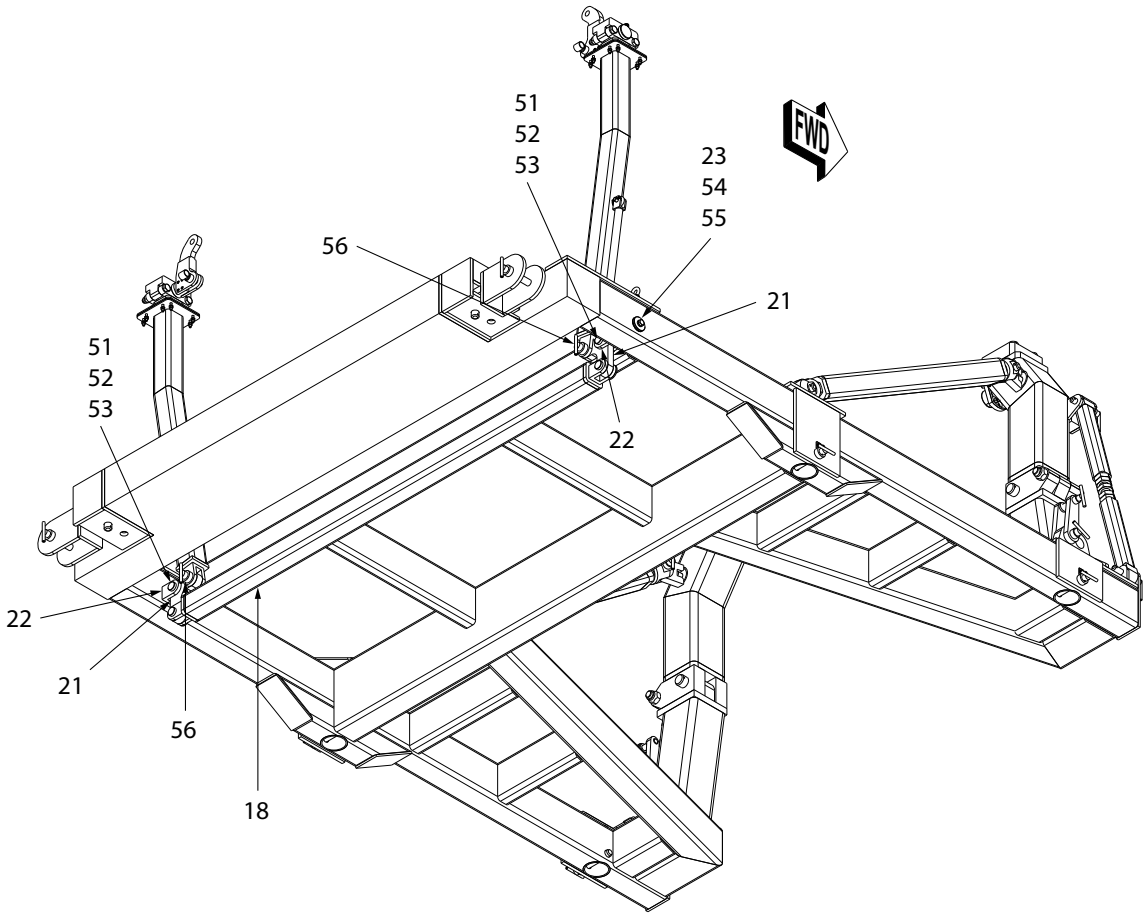

Figure 8.2-3

IPB Figure 3 - AGSE-E13223-S01
RH Trunnion Assembly

ITEM	PART NUMBER	QTY	PART DESCRIPTION
	AGSE-E13323-S01	-	RH Trunnion Assy (Illustration Figure 8.3-1)
1	AGSE-E13203-P02	1	Trunnion Saddle Plate - RH
2	AGSE-E13203-P03	1	Trunnion Cap
3	AGSE-E13204-P02	1	Trunnion FWD - Mount
4	AGSE-E13204-P04	1	Trunnion Retainer
5	Commercial	2	HHCS - 1/2”-20UNF x 1” Lg - SS
6	AGSE-E13205-P02	1	Retainer
7	AGSE-E13205-P01	1	Mount Adapter
8	92210A640	4	FHSCS - 3/8”-24UNF x 3/4” Lg - Cres
9	AGSE-E13204-P03	1	Bearing Retainer
10	13SF22	1	Spherical Bearing - Plain
11	AGSE-E13205-P03	4	Mount Adapter Bolt
12	Commercial	4	Bolt - 3/4”-10UNC x 3-1/2” Lg - Gr 8 - Nickel Plt
13	Commercial	4	Flat Washer - 3/4” Dia. - SS
14	Commercial	4	Bolt - 5/8”-18UNF x 3-1/2” Lg - Gr 5 - Nickel Plt
15	Commercial	4	Flat Washer - 5/8” Dia. - SS

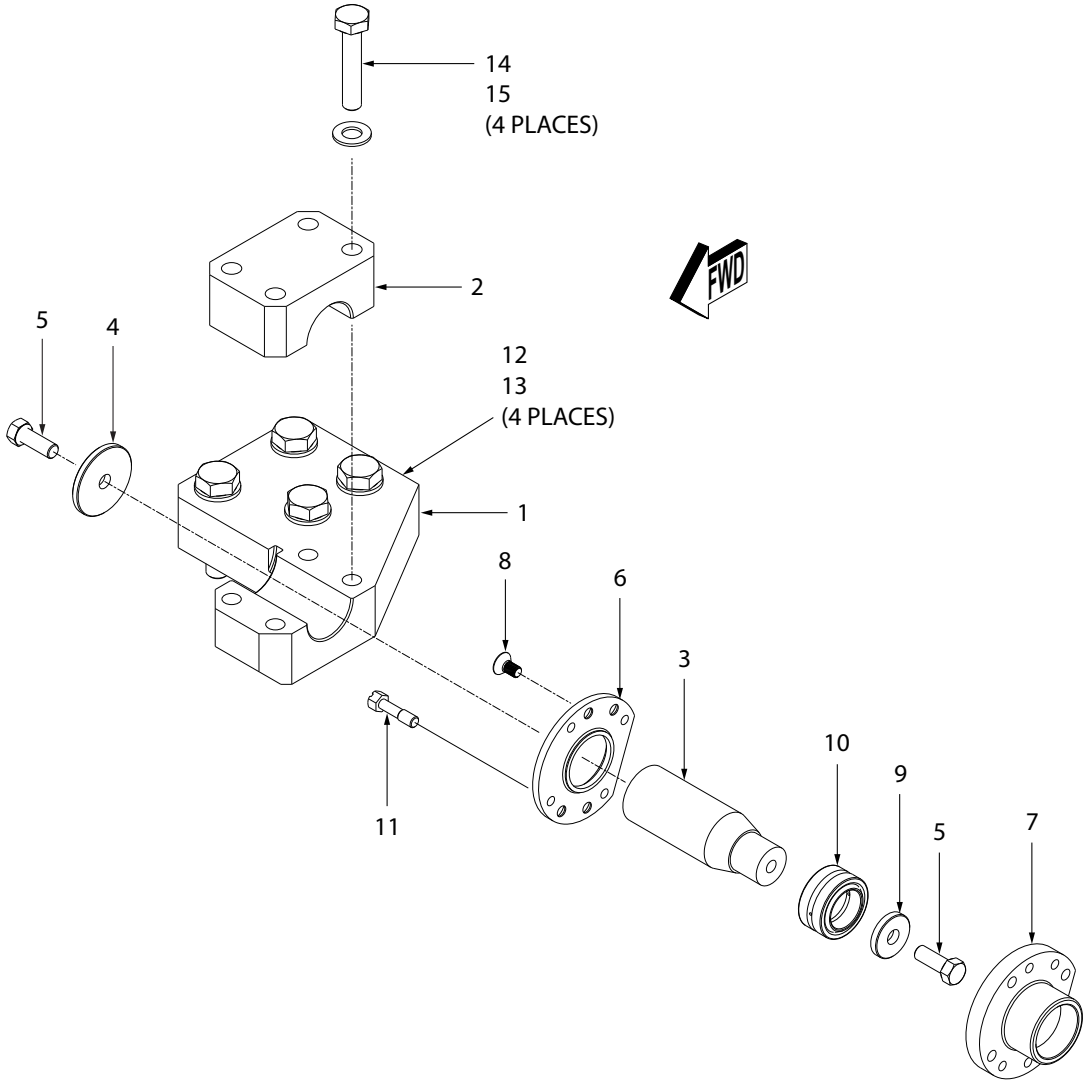

Figure 8.3-1

IPB Figure 4 - AGSE-E16607-S05
LH Trunnion Assembly

ITEM	PART NUMBER	QTY	PART DESCRIPTION
	AGSE-E16607-S05	-	LH Trunnion Assembly (Illustration Figure 8.4-1)
3	AGSE-E13203-P01	1	Trunnion Saddle Plate - LH
4	AGSE-E13203-P03	1	Trunnion Cap
6	AGSE-E13204-P01	1	Trunnion - FWD Mount - LH
7	AGSE-E13204-P03	1	Retainer
8	AGSE-E13205-P01	1	Mount Adapter
9	AGSE-E13205-P02	1	Retainer
10	AGSE-E13205-P03	4	Mount Adapter Bolt
11	13SF22	1	Sperical Bearing - 1” Dia. - 3.8” Nom Bore
12	Commercial	1	HHCS - 1/2”-20UNF x 1” Lg - Gr 5 - Zinc Plt
13	Commercial	4	FSHMS - 3/8”-24UNF x 3/4” Lg - Gr 5 - Zinc PLt
14	Commercial	4	HHCS - 5/8”-18UNF x 3-1/2” Lg - Gr 5 - Nickel Plt
15	Commercial	4	Flat Washer - 5/8” Nom ID - Cres
16	Commercial	4	HHCS - 3/4”-10UNC x 3-1/2” Lg - Gr 5 - Nickel Plt
17	Commercial	4	Flat Washer - 3/4” Nom ID - Cres

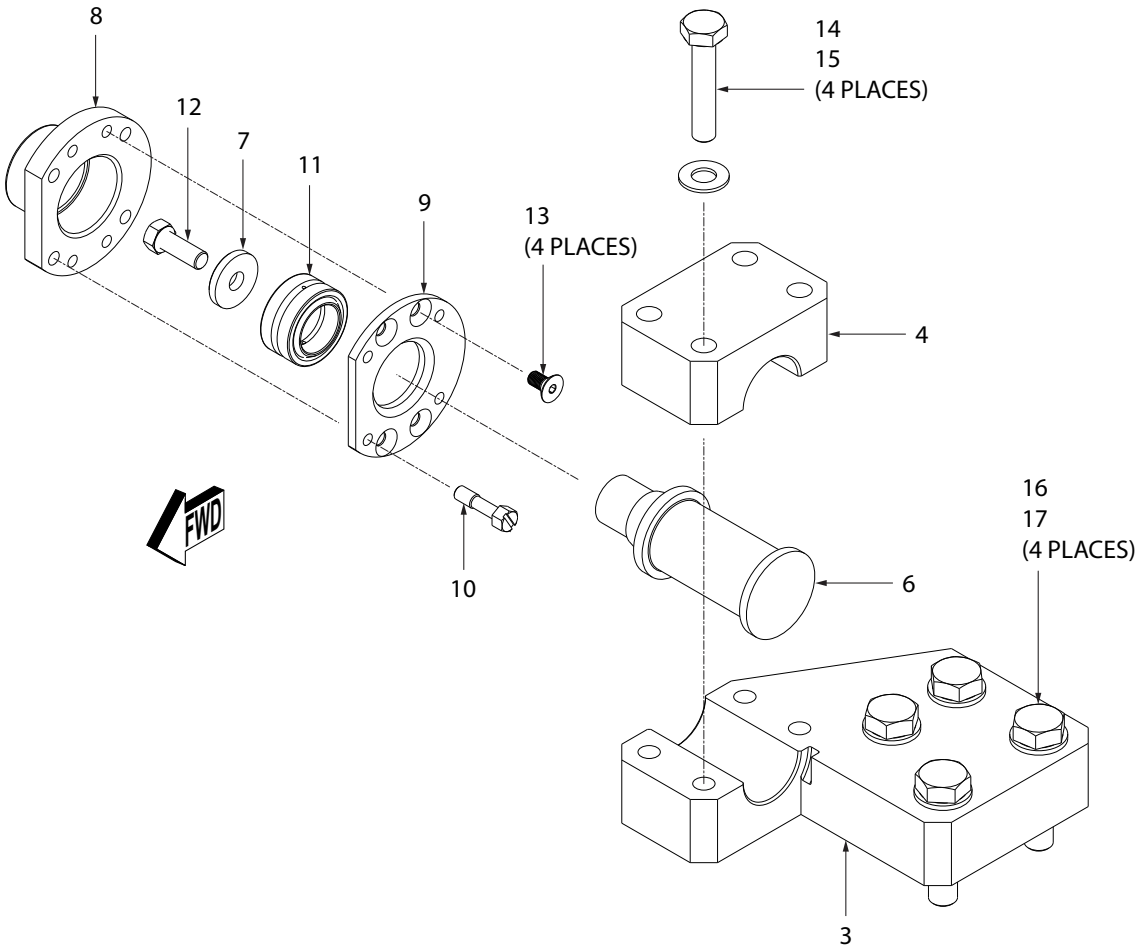

Figure 8.4-1 AGSE-E16607-S05 LH Trunnion Assembly

IPB Figure 5 - AGSE-E13206-S01 Turnbuckle Brace Assembly

ITEM	PART NUMBER	QTY	PART DESCRIPTION
	AGSE-E13206-S01	-	Turnbuckle Brace Assy (Illustration Figure 8.5-1)
1	AGSE-E13206-P01	1	Brace Body - LH
2	AGSE-E13206-P02	1	Brace Body - RH
3	AGSE-E13206-P03	1	Adjusting Screw
4	Commercial	1	Hex Jam Nut - 1-1/4”-12UNF - LH
5	Commercial	1	Hex Jam Nut - 1-1/4”-12UNF - RH

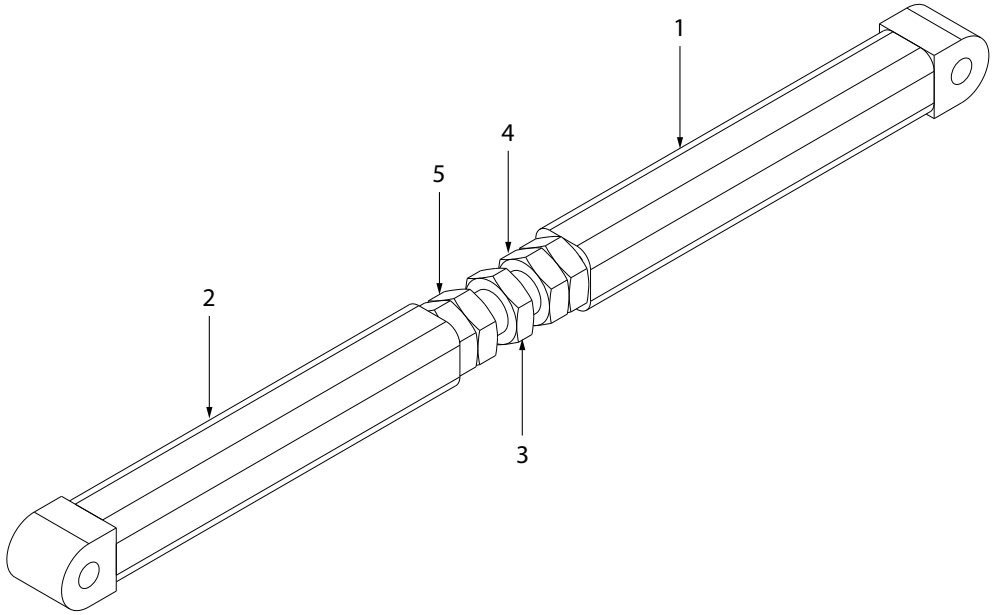

Figure 8.5-1 AGSE-E13206-S01 Turnbuckle Assembly

IPB Figure 6 - AGSE-E13218
AFT Mount Support Assemblies

ITEM	PART NUMBER	QTY	PART DESCRIPTION
	AGSE-E13218-S03 DLH	-	AFT Mount Support Assy - RH (Illustration Figure 8.6-1)
	AGSE-E13218-S04 DLH	-	AFT Mount Support Assy - LH (Illustration Figure 8.6-1)
1	AGSE-E13218-P02	1	AFT Mount Support Weldment - RH (Used on AGSE-E13218-S03DLH)
2	AGSE-E13218-P03	1	AFT Mount Support Weldment - LH (Used on AGSE-E13218-S04DLH)
3	AGSE-E13218-P04 DLH	1	Eye Bolt Modified
4	AGSE-E13208-S01	REF	AFT Mount Adapter Assy
5	AGSE-E13217-P03	1	Clamp Block - Upper Half
6	S-264-2	2	Pad Eye Size #2
7	91257A810	2	HHCS - 2/8”-11UNC x 4” Lg - Gr 8 - Zinc Plt
8	Commercial	2	Self-Locking Hex Nut - 5/8”-11UNC - Zinc Plt
9	Commercial	1	Roll Pin - 1/16” Dia. x 3/4” Lg - Zinc Plt
10	Commercial	2	5/8-11UNC Flange Hex Nut- Zinc Plt

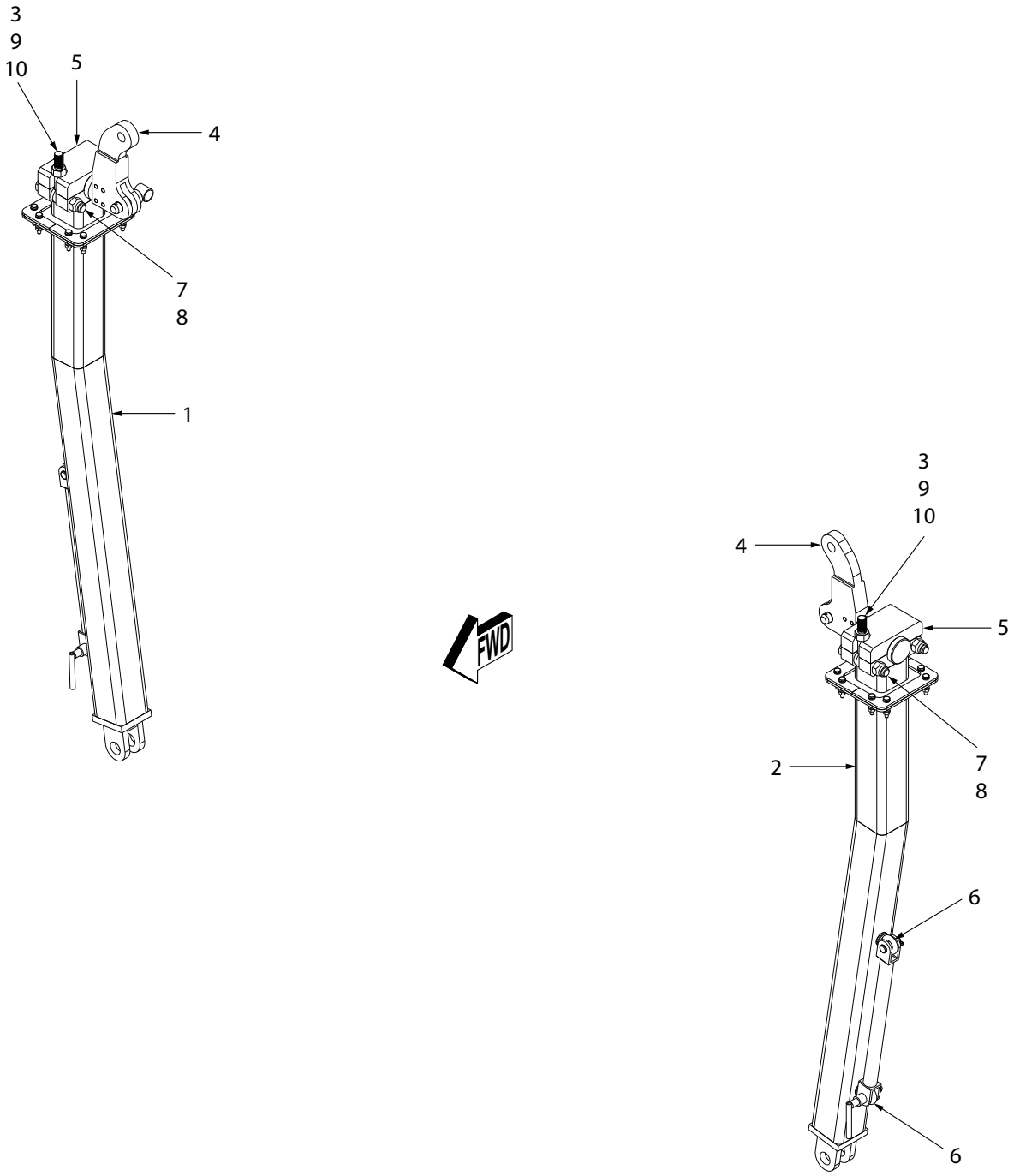

Figure 8.6-1 AGSE-E13218 AFT Mount Support Assemblies

IPB Figure 7 - AGSE-E133-G02-LTLS Base Assembly

ITEM	PART NUMBER	QTY	PART DESCRIPTION
	AGSE-E133-G02-LTLS	-	Base Assembly
			(Illustration Figures 8.7-1 through 8.7-2)
1	AGSE-E13301-P04 DLH	1	Base Weldment
2	AGSE-E13301-P02	1	Latch Plate
3	AGSE-E13302-P02	1	FWD Shock Mount Weldment - LH
4	AGSE-E13303-P02	2	AFT Shock Mount Weldment - Upper
5	AGSE-E13308-S01	2	Caster Mount Assy
			(See IPB Figure 8 for Details)
6	AGSE-E13304-P02	4	Pivot Pin
8	AGSE-E13305-S02 DLH	2	Tow Bar Assy
9	AGSE-E13306-P04	1	Forkstop Weldment - LH
10	AGSE-E13308-S02	2	Caster Mount Assy
			(See IPB Figure 8 for Details)
11	Commercial	A/R	Non-Skid Tape - Self-Adhesive - Black
			(Non-Illustrated)
12	AM-2079-7	4	Caster - 16” Dia. - 6,500 Lb Cap
			(See IPB Figure 9 for Details)
13	J-6332-104	16	Shock Mount (C596104B)
14	AM91500-120T	4	Safety Pin Assy
15	Commercial	8	HHCS - 5/8”-11UNC x 3” Lg - Gr 5 - Zinc Plt
16	Commercial	8	HHCS - 5/8”-11UNC x 2-3/4” Lg - Gr 5 - Zinc Plt
17	Commercial	16	Lock Washer - 5/8” Nom ID - Zinc Plt
18	Commercial	16	Hex Nut - 5/8”-11UNC - Zinc Plt
19	Commercial	44	HHCS - 1/2”-20UNF x 1-1/4” Lg - Gr 5 - Zinc Plt
20	Commercial	56	Flat Washer - SAE - 1/2” Nom ID - Zinc Plt
21	Commercial	AR	.030” Dia. Safety Wire - Cres
22	Commercial	68	Hex Lock Nut - 1/2”-20UNF - Zinc Plt
23	AM-90250-64L	1	Safety Pin Assy
24	Commercial	1	HHCS - 1/4”-20UNC x 4-1/2” Lg - Cres

IPB Figure 7 - AGSE-E133-G02-LTLS Base Assembly (Continued)

ITEM	PART NUMBER	QTY	PART DESCRIPTION
25	Commercial	1	Hex Lock Nut - 1/4”-20UNC - Cres
26	CL-8-BLPB-2.0-S	2	Ball Lock Pin - 1/2” Dia. x 2” Grip
27	AGSE-E13306-P06	1	Forkstop Weldment - RH
30	AGSE-E13305-P03	2	Steering Bar
31	AM-90250-32L	2	Safety Pin Assy
32	YRX183	1	Container
33	CL-6-BLPT-3.00	2	Ball Lock Pin - 3/8” Dia. x 3”
34	AGSE-E13309-S01	1	Storage Box Foam Assy
35	Commercial	12	Thread Stud - 1/2”-20UNF x 1-3/4” Lg. Type 316 Stainless Steel
36	AGSE-E13302-P03	1	FWD Shock Mount Weldment - RH
37	Commercial	2	Flat Washer - SAE - 1” Nom ID - SS
38	Commercial	2	Cotter Pin - 1/8” Dia. x 2” Lg - SS

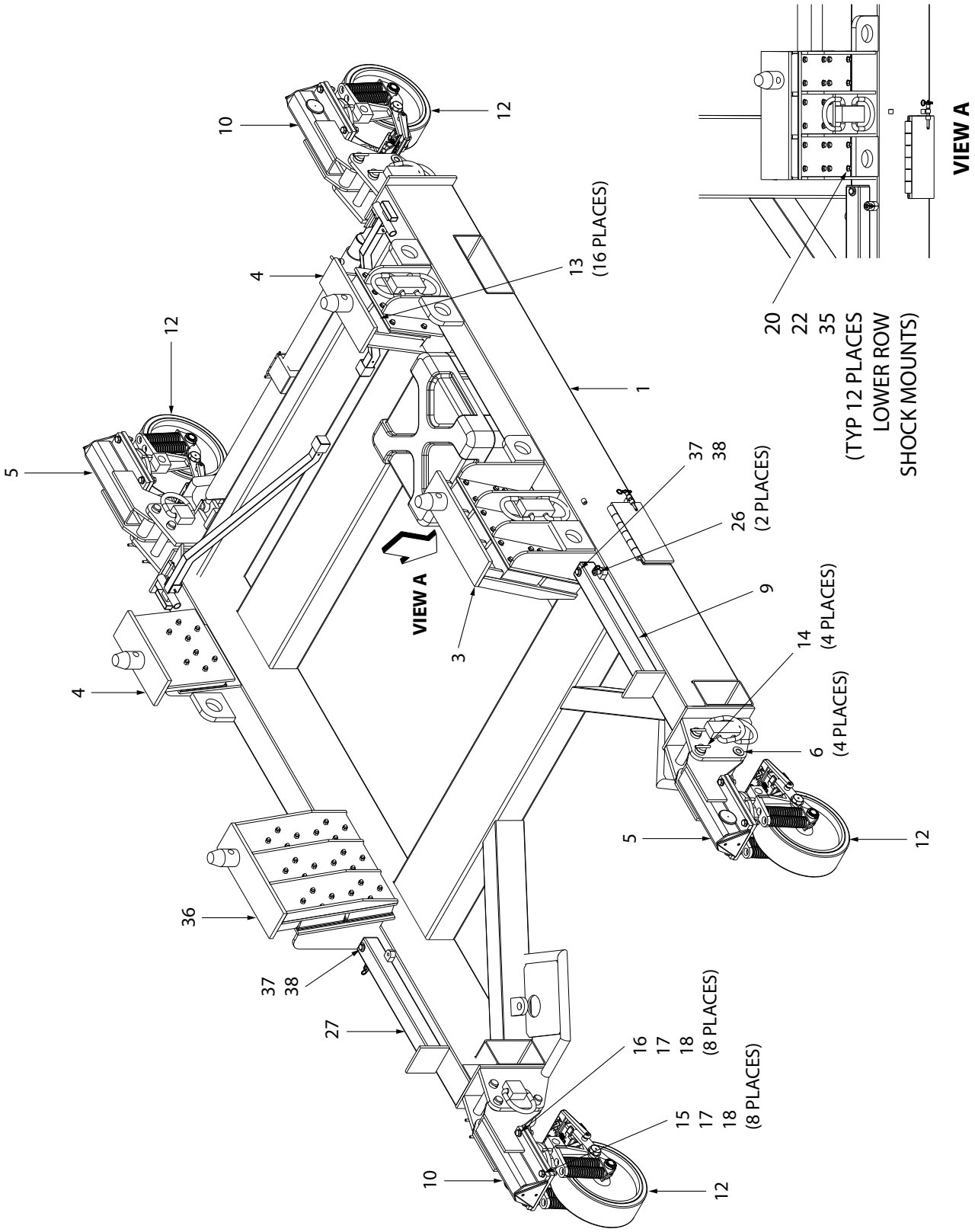

Figure 8.7-1 AGSE-E133-G02-LTLS Base Assembly

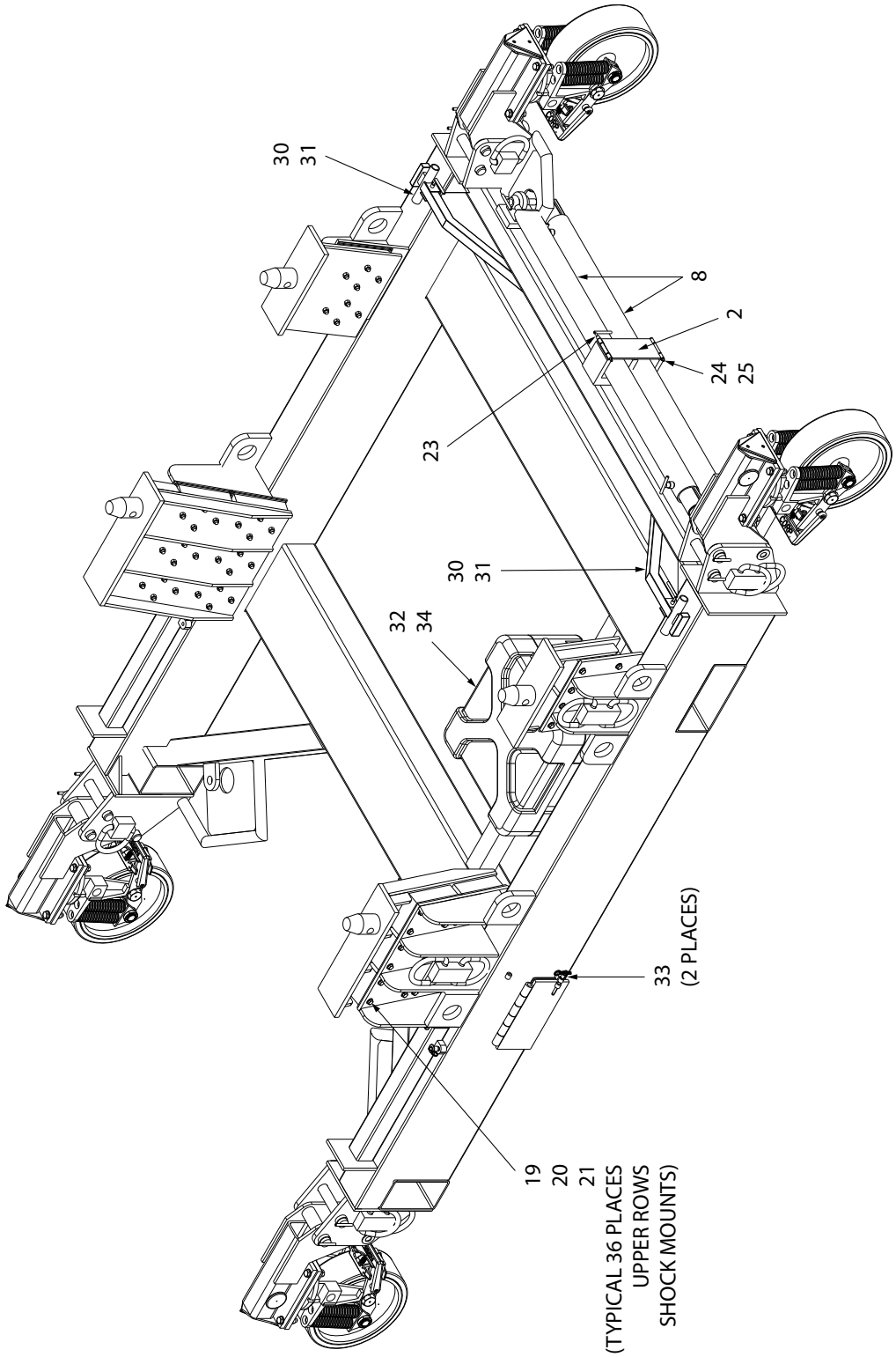

Figure 8.7-2 AGSE-E133-G02-LTLS Base Assembly

IPB Figure 8 - AGSE-E13308 Caster Mount Assembly

ITEM	PART NUMBER	QTY	PART DESCRIPTION
	AGSE-E13308-S01	-	Caster Mount Assy (Figure 8.8-1)
	AGSE-E13308-S02	-	Caster Mount Assy (Figure 8.8-1)
1	AGSE-E13307-P01	1	Caster Mount Weldment (Used on AGSE-E13308-S01)
2	AGSE-E13307-P02	1	Caster Mount Weldment (Used on AGSE-E13308-S02)
3	8RA002020	1	Triangle Reflector Euro Red - 136mm x 155mm
4	59531T18	1	Reflector - Yellow - 3-1/8” OD
5	Commercial	3	Rd Hd Phillips Machine Screw - #8-32UNC x 1/2”
6	Commercial	3	Lock Washer - #8 - Zinc Plt
7	Commercial	3	Flat Washer - #8 - Zinc Plt

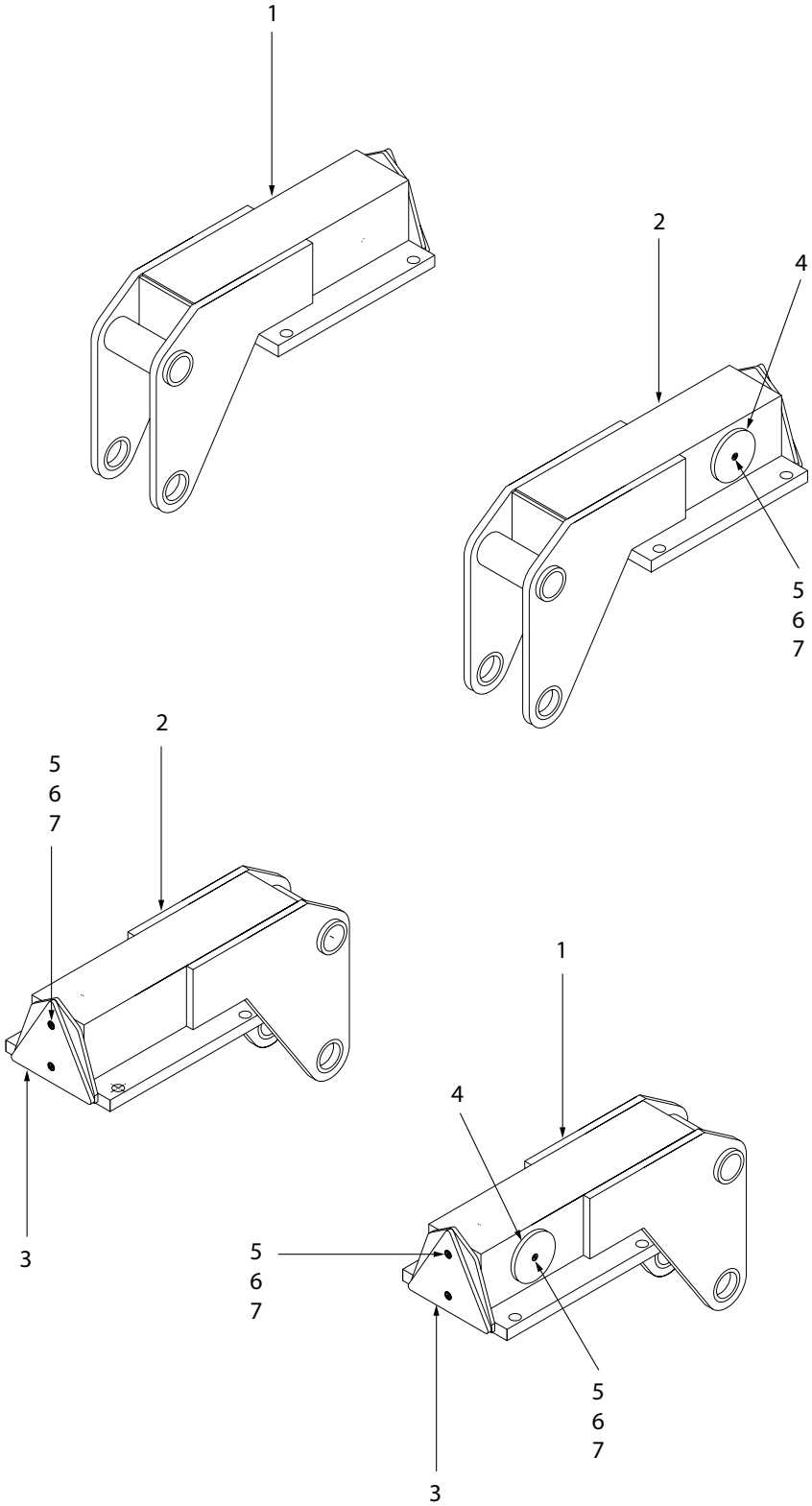

Figure 8.8-1 AGSE-E13308 Caster Mount Assemblies

IPB Figure 9 - AM-2079-7
Shock Absorbing Swivel Caster Assembly

ITEM	PART NUMBER	QTY	PART DESCRIPTION
	AM-2079-7	-	Shock Absorbing Swivel Caster Assy (Figure 8.3-1)
3	AM-2079-7-205	1	Side Plate Assy (16” Wheel)
4	AM-2079-7-204	1	Side Plate Assy (16” Wheel) Opposite Side
6	AM-2079-7-500	1	Wheel Fork
9	AM-2079-7-308	1	Wheel - 16” (16” Dia. - 5” Wide Polyurethane Seal - Tapered Roller Bearing - 1-1/4” Bore - Caster Tech #030-486)
11	AM-2079-313	2	Die Spring - 1” ID x 2” OD x 8” LG
12	Commercial	4	Self-Locking Hex Socket Hd Cap Screw - 1/2”-13 x 3-1/4” Lg
15	AM-2079-7-200	2	Spring Load bracket
16	AG101	1	M10 x 45 Degree Grease Fitting
17	AM-2079-701	1	Brake Pad
18	AM-2079-326	4	Extension Spring #145 0.65 OD x 0.065 Wire Dia. x 1.5” Lg - SS Aranki Spring
19	Commercial	4	Socket Head Cap Screw - 1/4”-20 x 3/4” Lg - Zinc Plt Gold
21	AM-2079-127	1	Lock Nut - 1-1/4”-12UNF
22	CL-2-SS	2	Shoulder Screw - 3/8” Dia. x 3/8” Lg (5-16X 18)
23	Commercial	1	Hex Nut - 3/8”-16UNC
24	AM-2079-124	1	Knurled Hd Screw - 3/8”-16 x 2” Lg (Carr-Lane #CL-10-KHS)
25	AM-2079-504	1	Spring Brace
26	AM-2079-121	2	Round Tube Spacer - 1018 Steel - 1.260” ID x 1-1/2” OD x .710 Lg
27	AM-2079-323	2	Fork Pivot Bolt
28	AM-2079-119	6	Plastic Washer - 1-1/4” ID x 2” OD x 1/32” Thk

IPB Figure 9 – AM-2079-7
Shock Absorbing Swivel Caster Assembly (Continued)

ITEM	PART NUMBER	QTY	PART DESCRIPTION
33	AM-2079-324	4	Spring Retainer
34	TCL 20-12-FZ	2	Threaded Shaft Collar
35	AM-2079-601	1	Brake Pedal
36	AM-2079-1000	1	Mounting Plate Assy
37	AM-2079-105	1	Thrust Bearing
38	AM-2079-319	1	Wheel - Axle
39	LM67000LA	1	Bearing Seal
40	AM-2079-111	1	Flat Washer
41	AM-2079-149	1	Swivel Lock Assy
42	LM67010	1	Bearing Cup

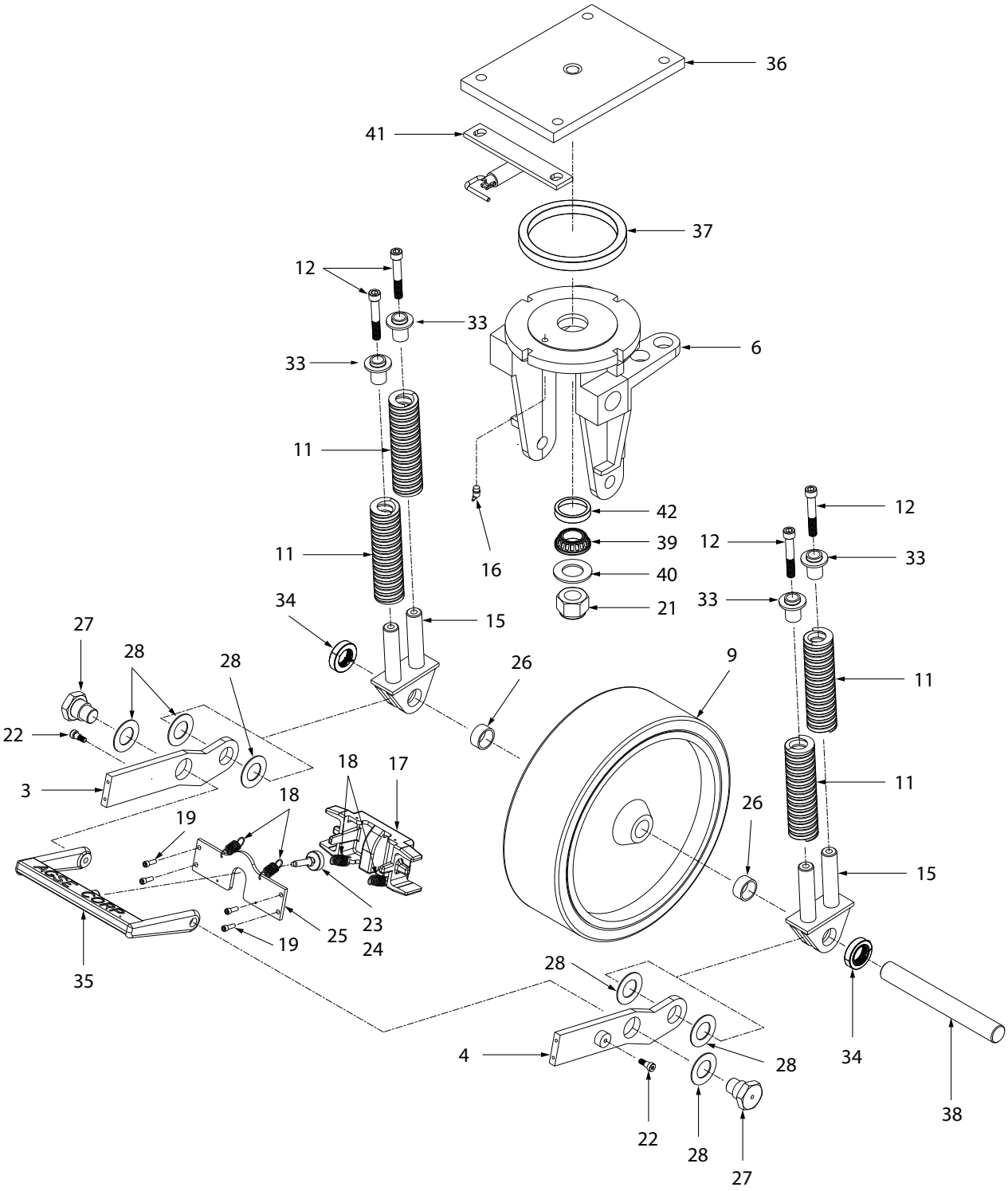

Figure 8.9-1 AM-2079-7 Caster Assembly

9.0 – Stencils, Decals, and Placards

9.1 General

Various stencils, decals, and placards are added to the equipment to provide warnings, cautions, and general information. These items should be reviewed and understood by maintenance and user personnel.

9.1 Stencils, Decals and Placards

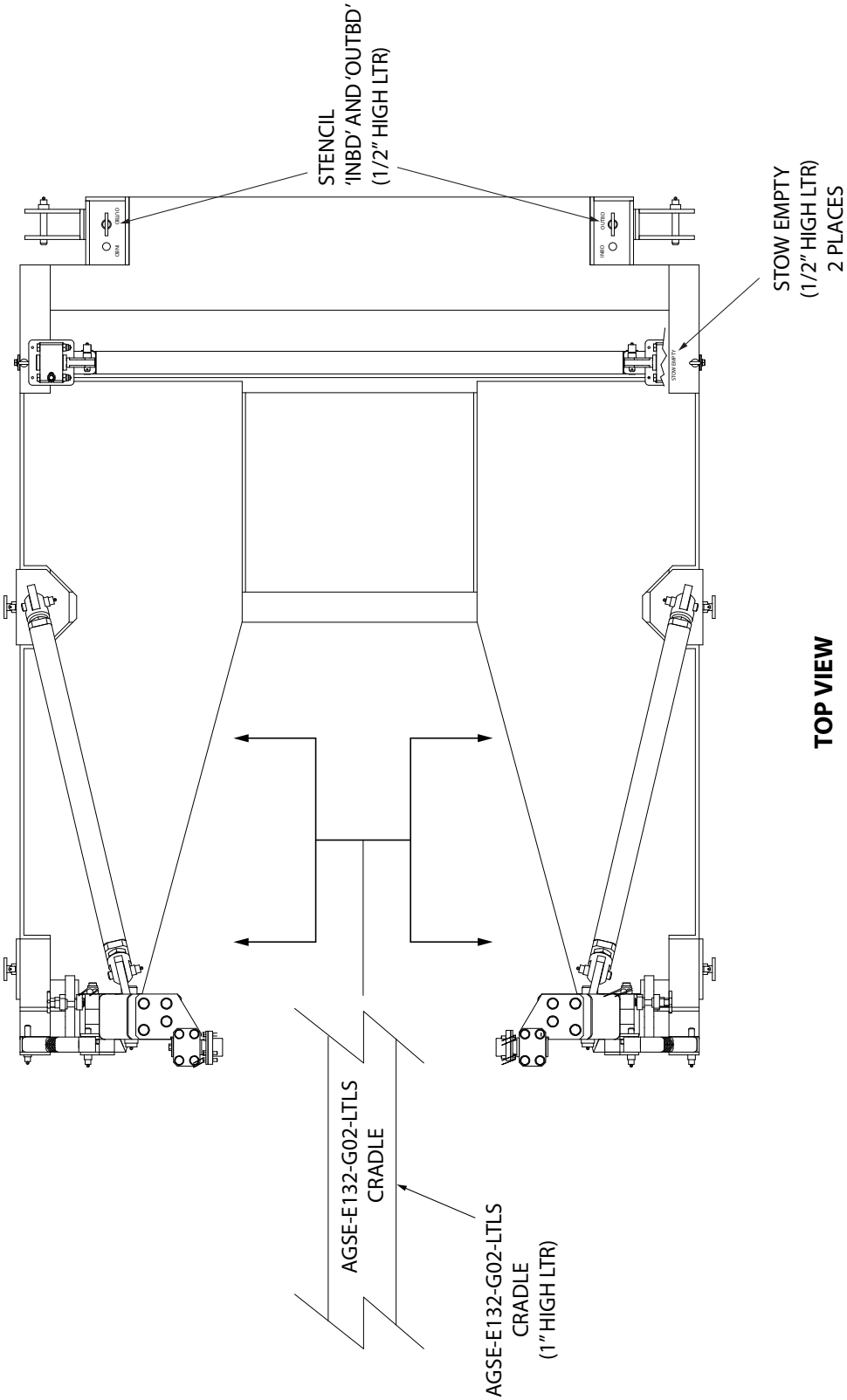

Figure 9.2-1 Cradle Stencils and Placards

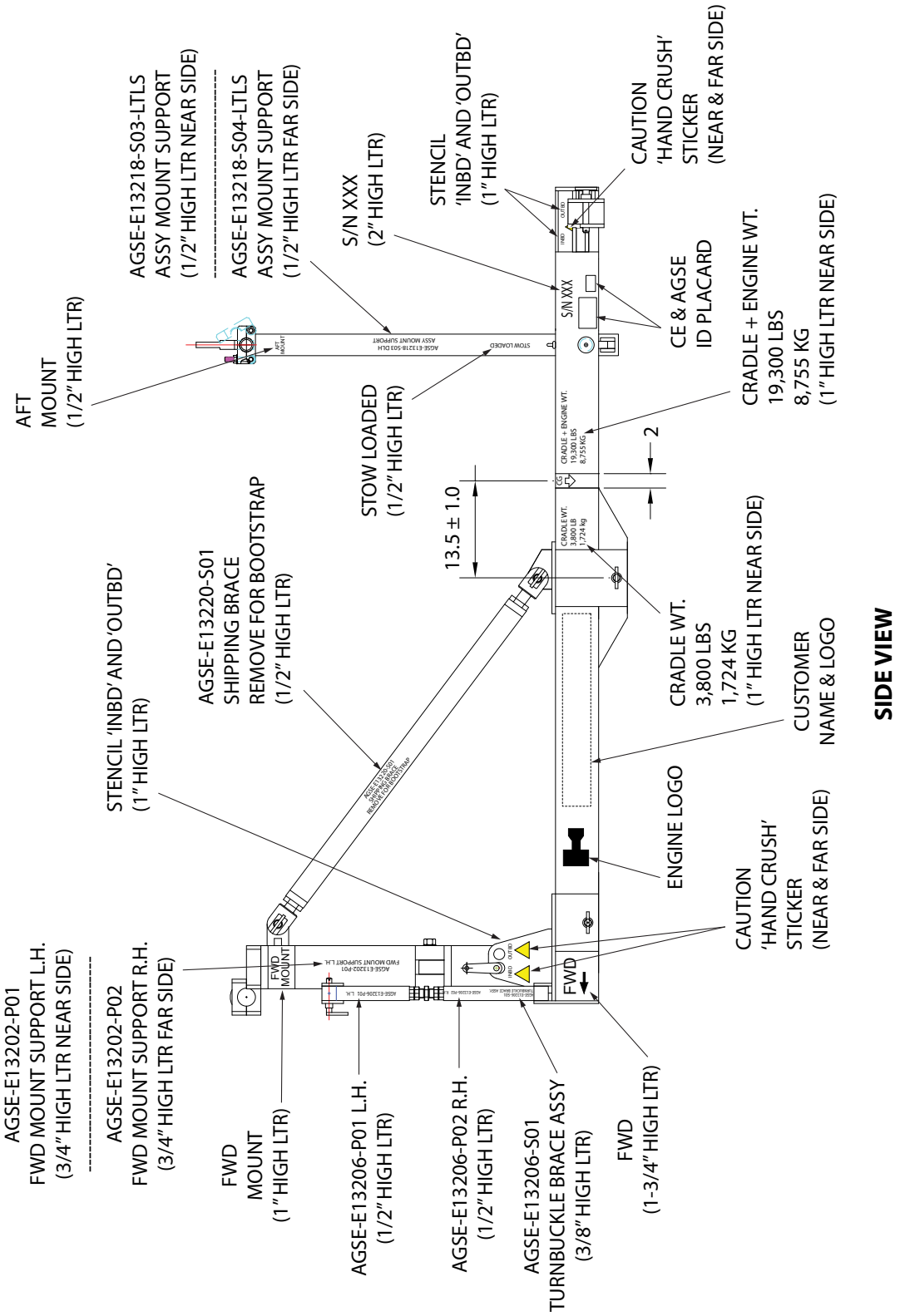

Figure 9.2-2 Cradle Stencils and Placards

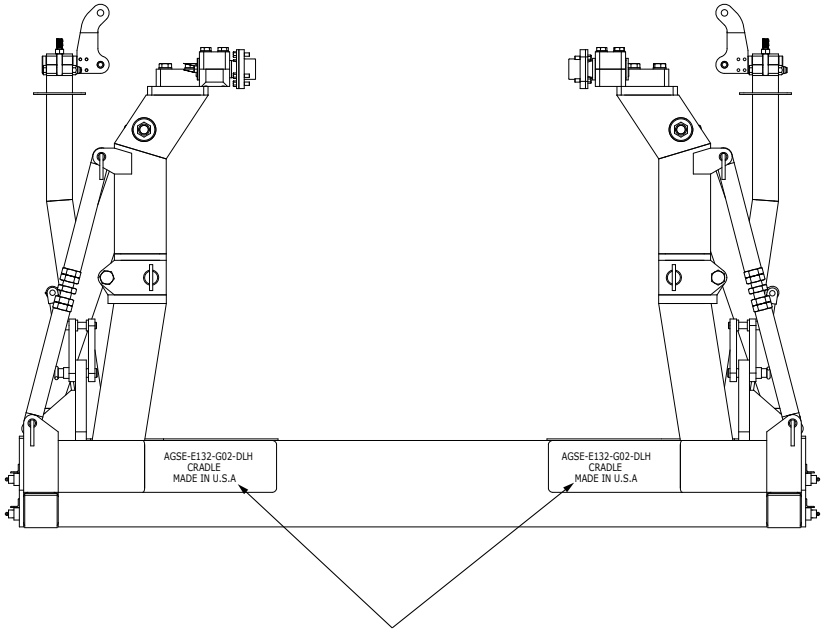

VIEW FWD LOOKING AFT

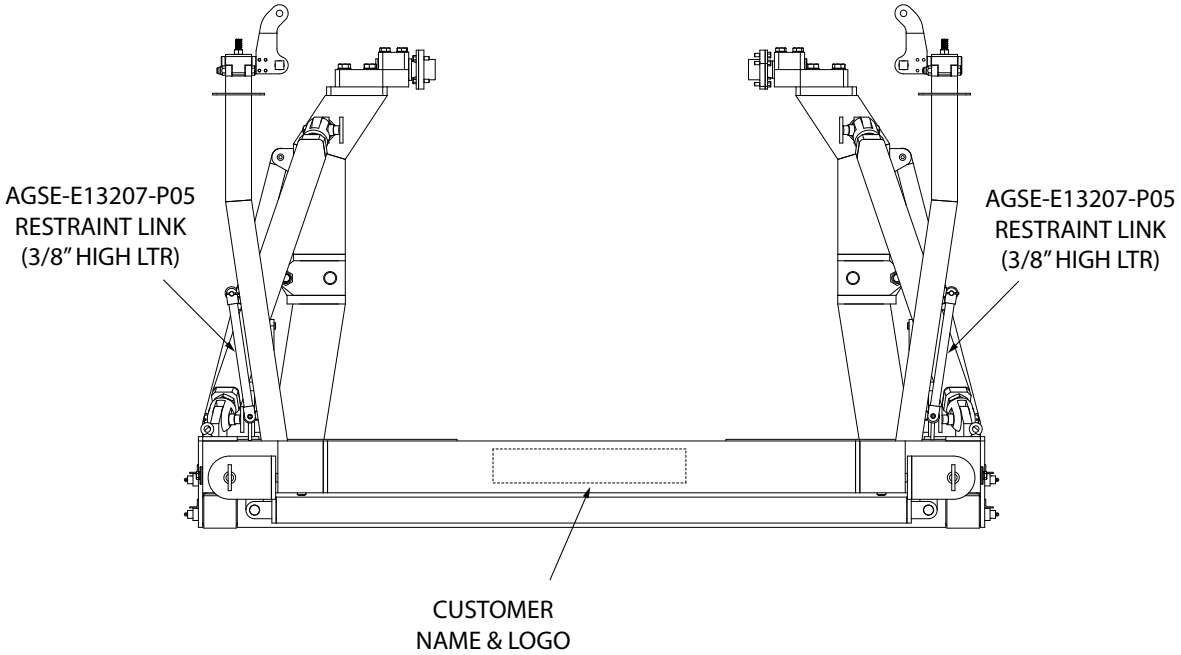

VIEW AFT LOOKING FWD

Figure 9.2-3 Cradle Stencils and Placards

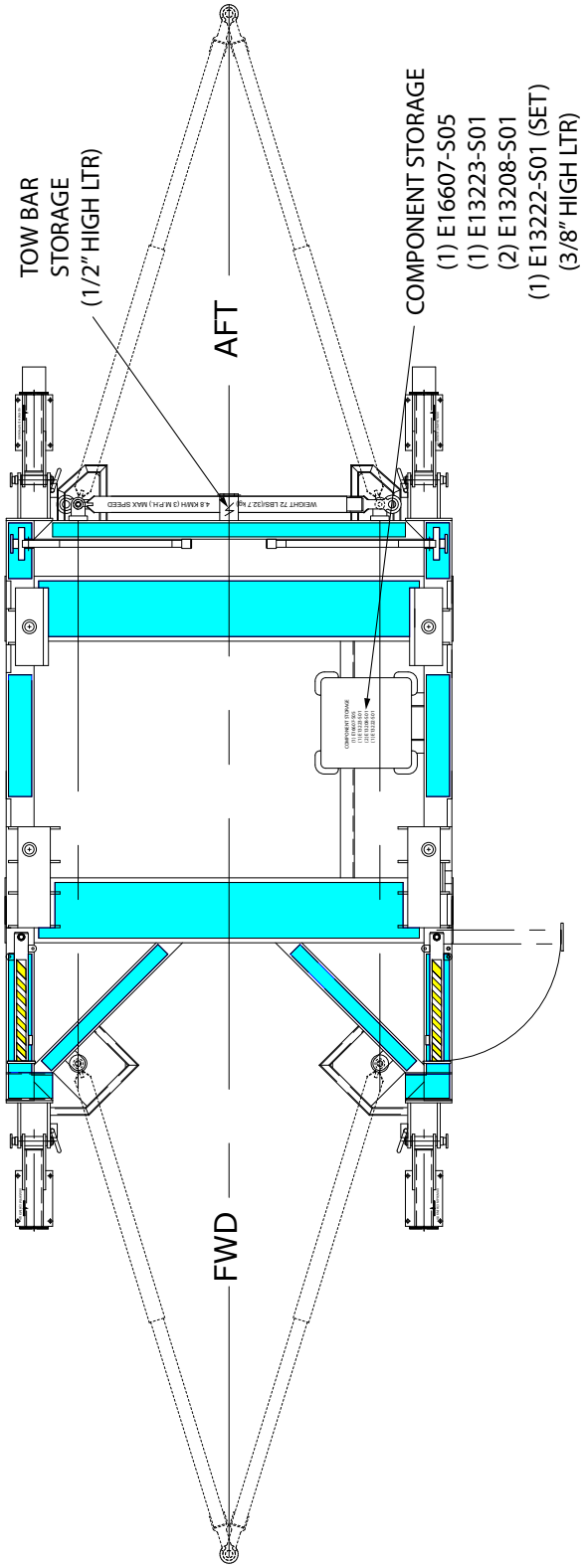

Figure 9.2-4 Base Stencils and Placards

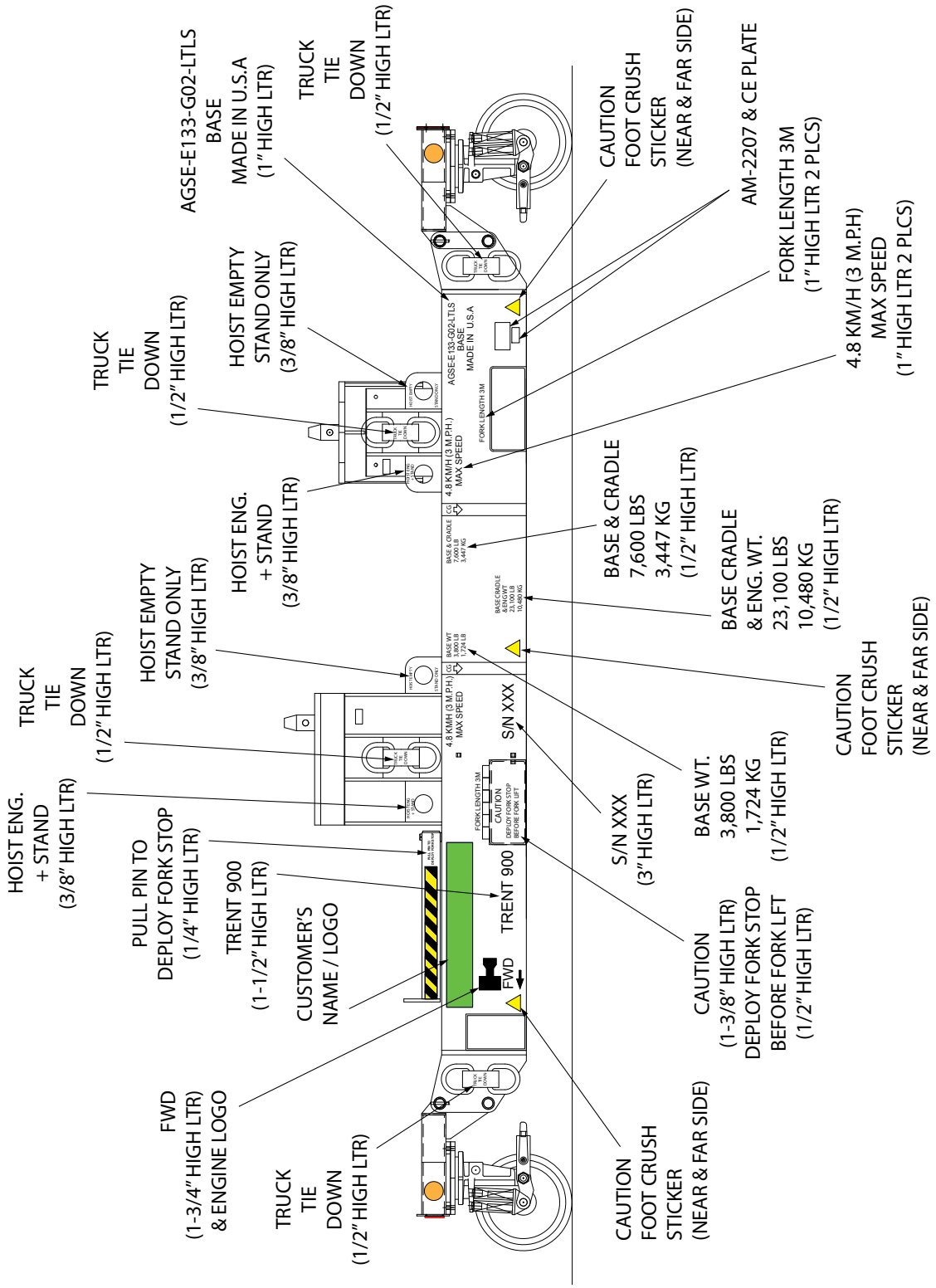

Figure 9.2-5 Base Stencils and Placards

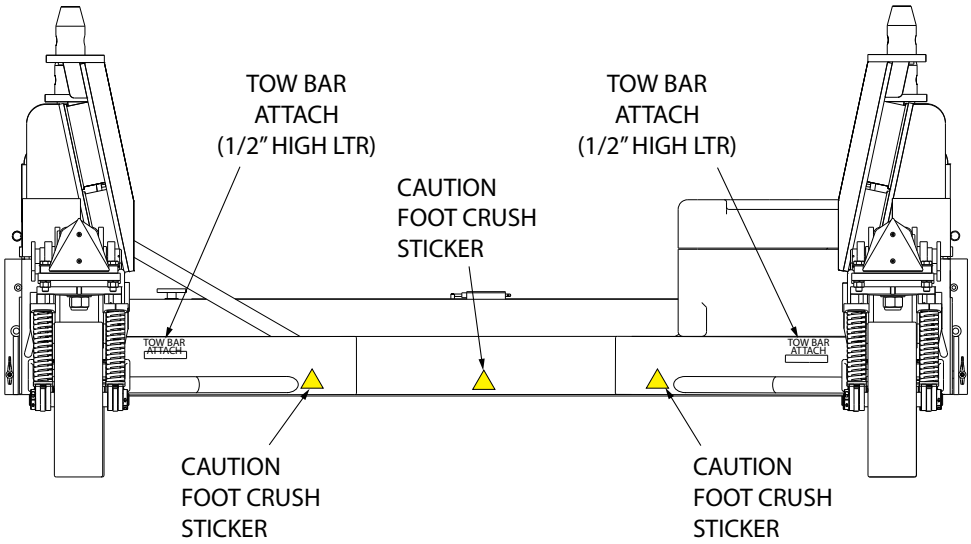

VIEW FWD LOOKING AFT

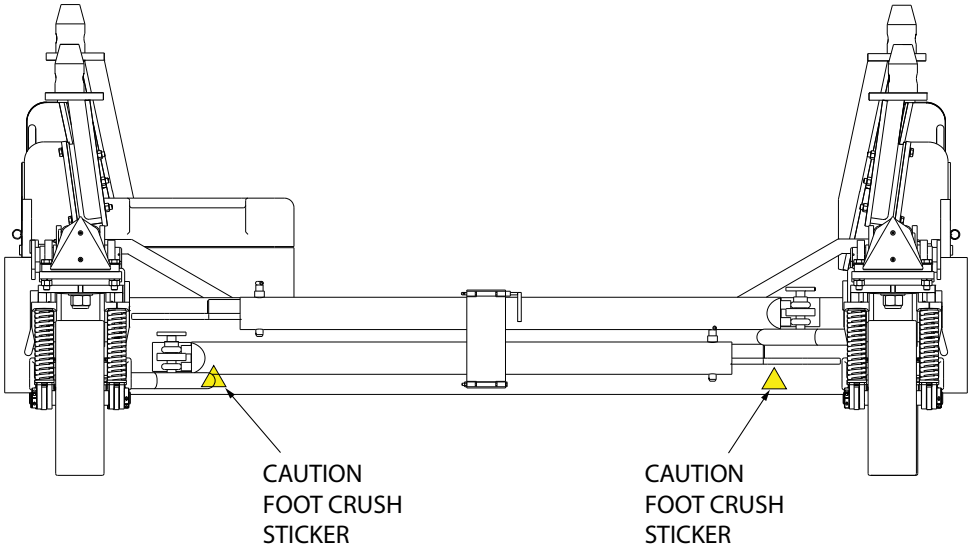

VIEW AFT LOOKING FWD

Figure 9.2-6 Base Stencils and Placards

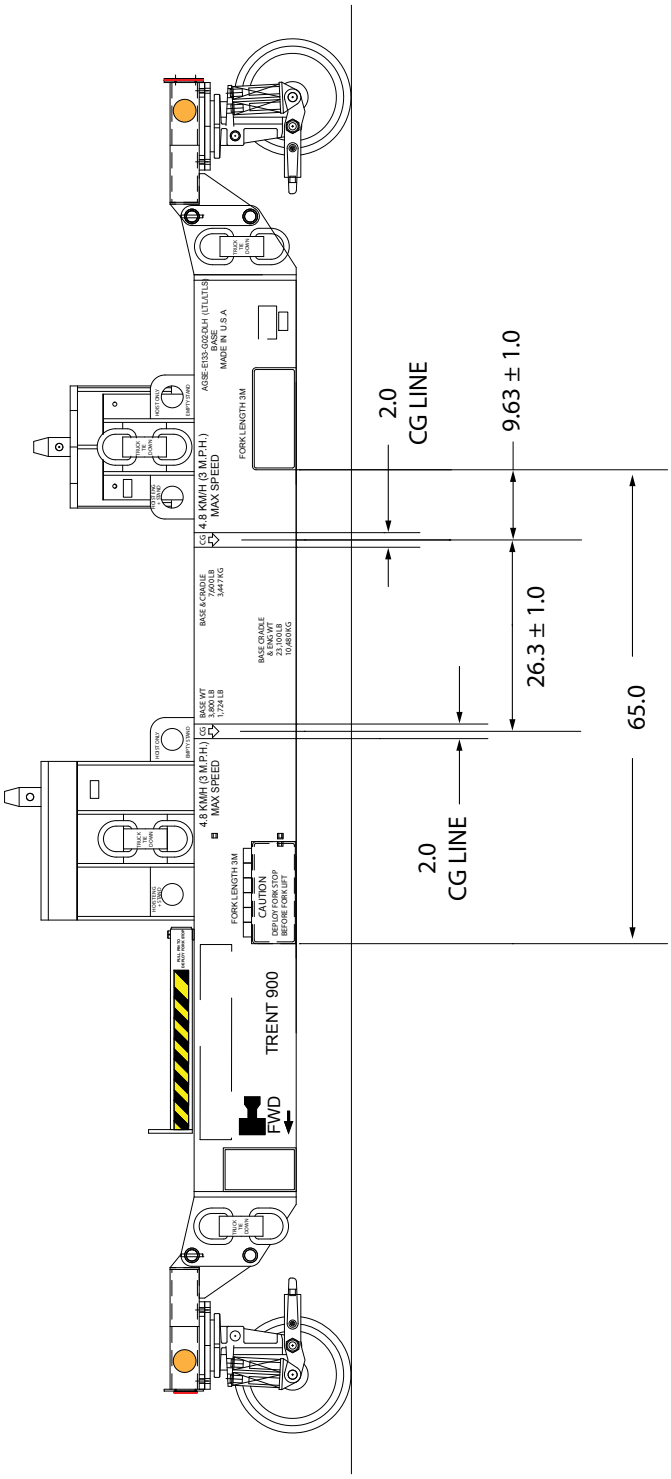

Figure 9.2-7 Base Stencils and Placards

10.0 – Recommended Spares

10.1 Terms

Normal lead time for most items is eight (8) weeks ARO (subject to review at time order is placed), FOB point is our factory in Santa Fe Springs, California. Standard terms are net twenty (20) days. Any prices given are valid for thirty (30) days from date of issuance. Prices do not include any local, state, or federal taxes.

10.2 Critical Items

AGSE defines "critical" items as those items, if broken or missing, that would render the equipment inoperable or severely impair equipment operation. Since most of these items are also long leads, it is AGSE's recommendation that such items be identified, purchased, and stocked by the customer. In the remote event of "critical" item failure, the equipment can be quickly repaired and placed back in service with minimal down time.

AGSE does not typically stock all components used with the equipment, so immediate shipment of "critical" items may not always be possible. AGSE will respond to customer requests for quotation on any spare parts, and expedite orders for spare parts as required. The customer should never assume immediate delivery is always possible.

It is the responsibility of the operator of the equipment to review the recommended spares list and balance costs against equipment down-time. The list can be adjusted by the operator based on the actual service life of components experienced during equipment usage.

ITEM	PART NUMBER	QTY	PART DESCRIPTION
	AGSE-E132-G02-LTLS		
24	AGSE-E13208-P05	1	AFT Mount Pin
29	AM-90875-66T	1	Safety Pin Assy
31	13SF22	1	Spherical Bearing - Plain
32	AGSE-E13209-P04	2	Cradle Pin
34	AM-91000-40T	2	Safety Pin Assy
36	AM-91500-100T-H900	1	Safety Pin Assy
44	92210A640	4	FLT SOC HD SCR 3/8"-24UNF x 3/4" Lg CRES
45	Commercial	4	HHCS 5/8"-18UNF x 3-1/4" Lg - Gr 5 - Zinc Plt
47	Commercial	4	HHCS 3/4"-10UNC x 3-1/2" Lg Gr 5 - Zinc Plt

ITEM	PART NUMBER	QTY	PART DESCRIPTION
	AGSE-E132-G02-LTLS		
49	AM-90750-48L-H900	2	Safety Pin Assy
51	CLP-230	2	Clevis Pin
56	AM-91000-32T	1	Safety Pin Assy
58	AM-91000-40T	1	Safety Pin Assy

ITEM	PART NUMBER	QTY	PART DESCRIPTION
	AGSE-E133-G02-LTLS		
6	AGSE-E13304-P02	2	Pivot Pin
12	AM-2079-7	2	Caster, 16” Dia. - 6,500 Lbs Cap.
14	AM-91500-120T	2	Safety Pin Assy
23	AM-90250-64L	1	Safety Pin Assy
26	CL-4-BLPB-4.50-S	1	Ball Lock Pin - 25” Dia. x 4-1/2” Grip
27	Commercial	1	Roll Pin - 1/2” Dia. x 2” Lg - CRES
31	AM-90250-32L	1	Safety Pin Assy